MTS 5/10 H T4 B T

Weidmüller Interface GmbH & Co. KG
Klingenbergstraße 26
D-32758 Detmold
Germany

www.weidmueller.com

Product image

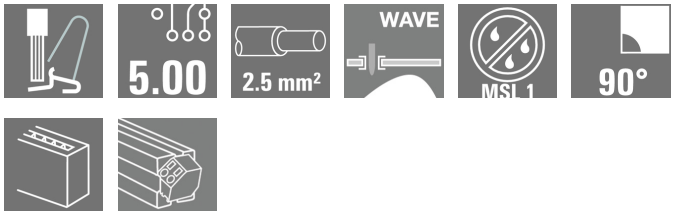

General ordering data

Version	Printed circuit board terminals, PCB terminal, THT solder connection, Pitch in mm (P): 5.00 mm, Number of poles: 10, Tube
Order No.	2913680000
Type	MTS 5/10 H T4 B T
GTIN (EAN)	4099986539679
Qty.	10 pc(s).
Product data	IEC: 400 V / 32 A / 0.5 - 4 mm² UL: 300 V / 18.5 A / AWG 20 - AWG 12
Packaging	Tube

MTS 5/10 H T4 B T

Weidmüller Interface GmbH & Co. KG
Klingenbergstraße 26
D-32758 Detmold
Germany

www.weidmueller.com

Technical data

Dimensions and weights

Depth	18.85 mm	Depth (inches)	0.742 inch
Height	16.7 mm	Height (inches)	0.657 inch
Height of lowest version	13.2 mm	Width	52.3 mm
Width (inches)	2.059 inch	Net weight	14.6 g

Temperatures

Installation temperature	-50 °C to +70 °C

System parameters

Product family	OMNIMATE 4.0	
Wire connection method	SNAP IN	
Property, clamping point	WireReady	
Mounting onto the PCB	THT solder connection	
Conductor outlet direction	90°	
Pitch in mm (P)	5 mm	
Pitch in inches (P)	0.197 "	
Number of poles	10	
Pin series quantity	1	
Number of rows	1	
Solder pin length (l)	3.5 mm	
Solder pin dimensions	0.6 x 0.8 mm	
Solder eyelet hole diameter (D)	1.3 mm	
Solder eyelet hole diameter tolerance (D)	+ 0,1 mm	
Number of solder pins per pole	2	
Stripping length	9 mm	
Stripping length tolerance	min.	8 mm
	max.	10 mm
L1 in mm	45 mm	
L1 in inches	1.772 "	
Touch-safe protection acc. to DIN VDE 0470	IP 20	
Touch-safe protection acc. to DIN VDE 57 106	Safe from finger touch	
Protection degree	IP20	

Material data

Insulating material	PA 9T	Colour	black
Colour chart (similar)	RAL 9011	Insulating material group	I
Comparative Tracking Index (CTI)	≥ 600	Moisture Level (MSL)	1
UL 94 flammability rating	V-0	Contact material	Cu-alloy
Contact surface	tinned	Tinning type	matt
Storage temperature, min.	-25 °C	Storage temperature, max.	55 °C
Operating temperature, min.	-50 °C	Operating temperature, max.	120 °C

Conductors suitable for connection

Clamping range, min.	0.34 mm²
Clamping range, max.	4 mm²
Wire connection cross section AWG, min.	AWG 12
Wire connection cross section AWG, max.	AWG 20

MTS 5/10 H T4 B T

Weidmüller Interface GmbH & Co. KG
Klingenbergstraße 26
D-32758 Detmold
Germany

www.weidmueller.com

Technical data

Solid, min. H05(07) V-U	0.5 mm²			
Solid, max. H05(07) V-U	2.5 mm²			
Flexible, min. H05(07) V-K	0.5 mm²			
Flexible, max. H05(07) V-K	4 mm²			
w. plastic collar ferrule, DIN 46228 pt 4, min.	0.34 mm²			
w. plastic collar ferrule, DIN 46228 pt 4, max.	2.5 mm²			
w. wire end ferrule, DIN 46228 pt 1, min.	0.5 mm²			
w. wire end ferrule, DIN 46228 pt 1, max.	2.5 mm²			
Outer diameter of insulation, max.	4 mm			
Clampable conductor	Cross-section for conductor connection	nominal	0.34 mm	
	wire end ferrule	Stripping length	nominal	10 mm
		Recommended wire-end ferrule	H0,34/12 TK	
	Cross-section for conductor connection	nominal	0.5 mm²	
	wire end ferrule	Stripping length	nominal	12 mm
		Recommended wire-end ferrule	H0,5/16 OR	
		Stripping length	nominal	10 mm
		Recommended wire-end ferrule	H0,5/10	
	Cross-section for conductor connection	nominal	0.75 mm²	
	wire end ferrule	Stripping length	nominal	12 mm
		Recommended wire-end ferrule	H0,75/16 W	
		Stripping length	nominal	10 mm
		Recommended wire-end ferrule	H0,75/10	
	Cross-section for conductor connection	nominal	1 mm²	
	wire end ferrule	Stripping length	nominal	12 mm
		Recommended wire-end ferrule	H1,0/16 GE	
		Stripping length	nominal	10 mm
		Recommended wire-end ferrule	H1,0/10	
	Cross-section for conductor connection	nominal	1.5 mm²	
	wire end ferrule	Stripping length	nominal	12 mm
		Recommended wire-end ferrule	H1,5/16 R	
		Stripping length	nominal	10 mm
		Recommended wire-end ferrule	H1,5/10	
	Cross-section for conductor connection	nominal	2.5 mm²	
	wire end ferrule	Stripping length	nominal	10 mm
		Recommended wire-end ferrule	H2,5/15D BL	
		Stripping length	nominal	10 mm
		Recommended wire-end ferrule	H2,5/10	

MTS 5/10 H T4 B T

Weidmüller Interface GmbH & Co. KG
Klingenbergstraße 26
D-32758 Detmold
Germany

www.weidmueller.com

Technical data

Rated data acc. to IEC

tested acc. to standard	IEC 60664-1, IEC 61984	Rated current, min. number of poles (Tu=20°C)	32 A
Rated current, max. number of poles (Tu=20°C)	32 A	Rated current, min. number of poles (Tu=40°C)	32 A
Rated current, max. number of poles (Tu=40°C)	32 A	Rated voltage for surge voltage class / pollution degree II/2	400 V
Rated voltage for surge voltage class / pollution degree III/2	320 V	Rated voltage for surge voltage class / pollution degree III/3	250 V
Rated impulse voltage for surge voltage class/ pollution degree II/2	4 kV	Rated impulse voltage for surge voltage class/ pollution degree III/2	4 kV
Rated impulse voltage for surge voltage class/ contamination degree III/3	4 kV		

Rated data acc. to CSA

Wire cross-section, AWG, min.	AWG 20	Wire cross-section, AWG, max.	AWG 12

Rated data acc. to UL 1059

Institute (cURus)		Certificate No. (cURus)	E60693
Rated voltage (Use group B / UL 1059)	300 V	Rated voltage (Use group D / UL 1059)	300 V
Rated voltage (Use group F / UL 1059)	420 V	Rated current (Use group B / UL 1059)	18.5 A
Rated current (Use group D / UL 1059)	10 A	Wire cross-section, AWG, min.	AWG 20
Wire cross-section, AWG, max.	AWG 12	Clearance distance, min.	4 mm
Creepage distance, min.	5.6 mm	Reference to approval values	Specifications are maximum values, details - see approval certificate.

Classifications

ETIM 6.0	EC002643	ETIM 7.0	EC002643
ETIM 8.0	EC002643	ETIM 9.0	EC002643
ECLASS 9.0	27-44-04-01	ECLASS 9.1	27-44-04-01
ECLASS 10.0	27-44-04-01	ECLASS 11.0	27-46-01-01
ECLASS 12.0	27-46-01-01	ECLASS 13.0	27-46-01-01

Important note

IPC conformity	Conformity: The products are developed, manufactured and delivered according international recognized standards and norms and comply with the assured properties in the data sheet resp. fulfill decorative properties in accordance with IPC-A-610 "Class 2". Further claims on the products can be evaluated on request.
Notes	• Rated current related to rated cross-section & min. No. of poles. • P on drawing = pitch • Rated data refer only to the component itself. Clearance and creepage distances to other components are to be designed in accordance with the relevant application standards. • Long term storage of the product with average temperature of 50 °C and maximum humidity 70%, 36 months

MTS 5/10 H T4 B T

Weidmüller Interface GmbH & Co. KG
Klingenbergstraße 26
D-32758 Detmold
Germany

www.weidmueller.com

Technical data

Approvals

Approvals	
UL File Number Search	UL Website
Certificate No. (cURus)	E60693

Downloads

Approval/Certificate/Document of Conformity	cURus_CoC_E60693_MTS5_202310.pdf Declaration of the Manufacturer
Engineering Data	CAD data – STEP
Product Change Notification	Technical change to MTS 5 - Packaging
Catalogues	Catalogues in PDF-format

MTS 5/10 H T4 B T

Weidmüller Interface GmbH & Co. KG
Klingenbergstraße 26
D-32758 Detmold
Germany

www.weidmueller.com

Drawings

Product image

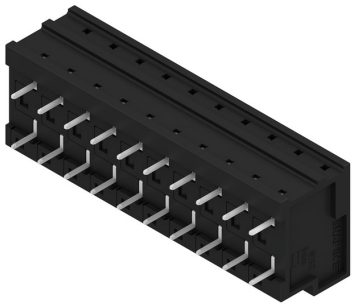

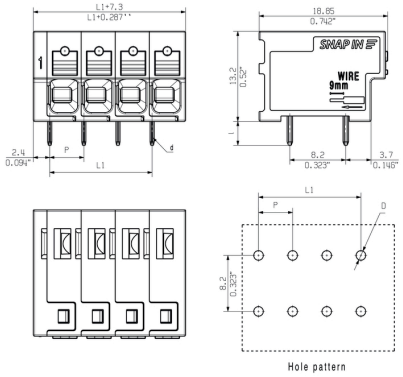

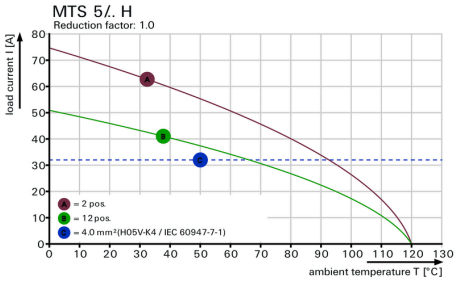

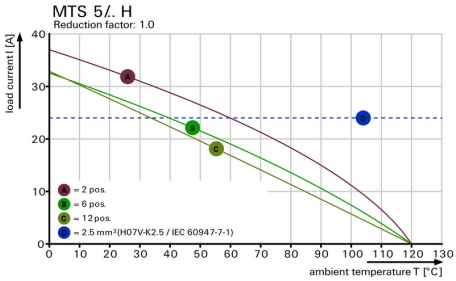

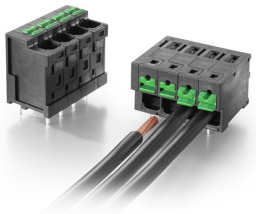

The English version is binding

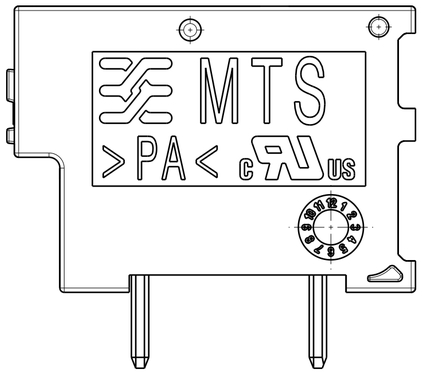

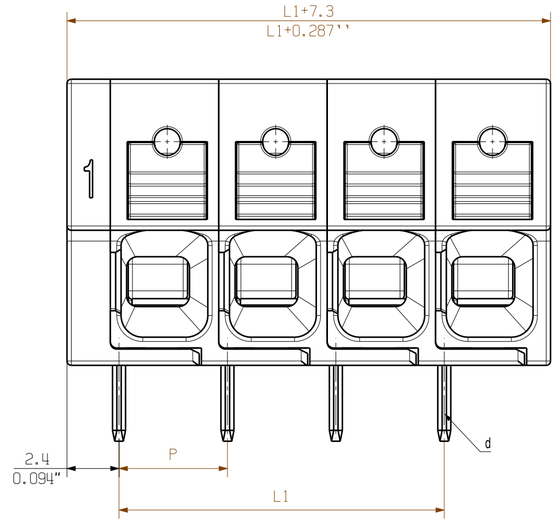

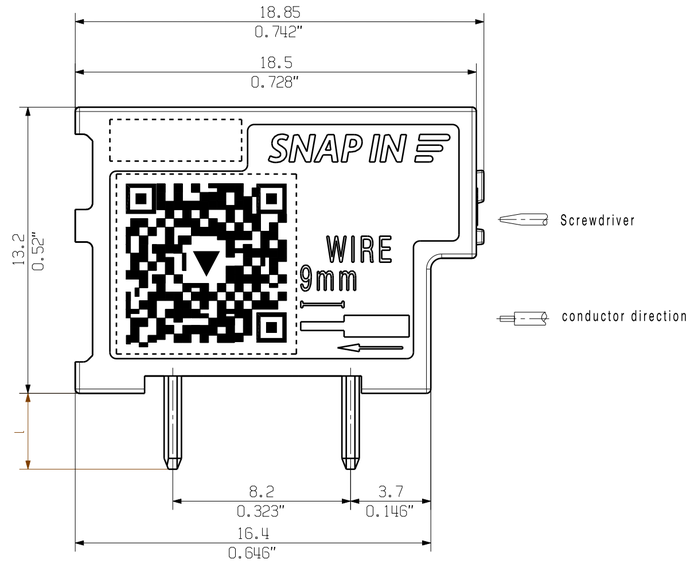

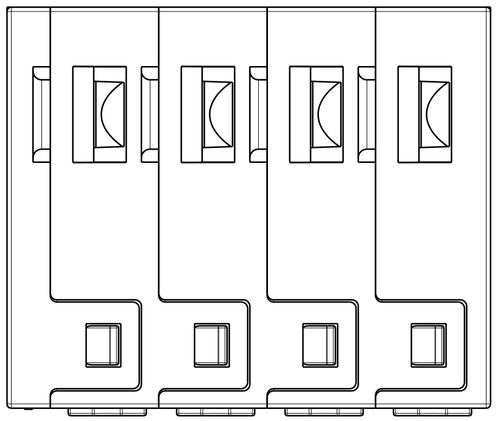

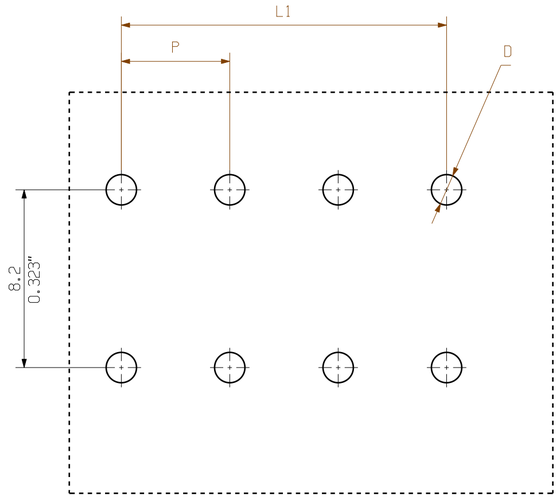

Hole pattern

n Poles	L1 [mm]	L1 [inch]
12	55.00	2.165
11	50.00	1.969
10	45.00	1.772
9	40.00	1.575
8	35.00	1.378
7	30.00	1.181
6	25.00	0.984
5	20.00	0.787
4	15.00	0.591
3	10.00	0.394
2	5.00	0.197

P = 5.00 / 0.197" Pitch

D = Ø1.3 +0.1 / 0.051"

d = 0.6x0.8 / 0.024"x0.031"

l = 3.5 / 0.138"

M 1/1

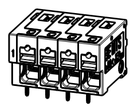

The dimensions and tolerances specified on the customer drawing reflect the geometry in dry condition and do not consider humidity and temperature effects.
A specific agreement / specification between manufacturer and customer is required if certain dimensions including tolerances must be guaranteed under environmental conditions in the storage phase or the application (e.g. high humidity and / or temperature).

For the mounting of PCBs, it should be noted that the rated data relates only to the PCB components alone. The neccessary creepage and clearance paths must be observed in connection with the respective applicant in accordance to IEC 60664-1 (VDE 0110).
The current-carrying capacity and pitch tolerance is to be determined according to DIN IEC 60326-3 very fine.

Weidmüller PCB components are tested to the IEC 60947-7-4 standard, and are valid for its field of application. Provided that the components are used to the intended purpose, all requirements with respect to the occuring of electrical, mechanical, thermic and corrosive stress will be satisfied.

General customer drawing, topical version only if required

General Tolerances: .		.	Tolerances ISO 8015
Changes: EC00009583	.	Weidmüller	77712 (Drawing no.) 1 (Index)
Mat. No. (SAP) .			Scale: 5:1 Sheet 2 / 3
Drawings Assembly			MTS 5/.../H... PCB TERMINAL LEITERPLATTENKLEMME
Drawn	Xiang, Keqin		
Responsible	Xiang, Keqin		
Approved	Xu, Shary	17.10.2023	

RoHS COMPLIANT

The reproduction, distribution and utilization of this document as well as the communication of its contents to others without explicit authorization is prohibited.
Offenders will be held liable for the payment of damages. Weidmueller exclusively reserves the right to file for patents, utility models or designs.
© Weidmueller Interface GmbH & Co. KG