AAP12 10/4X2.5 LO-LI DL RD

Weidmüller Interface GmbH & Co. KG
Klingenbergstraße 26
D-32758 Detmold
Germany

www.weidmueller.com

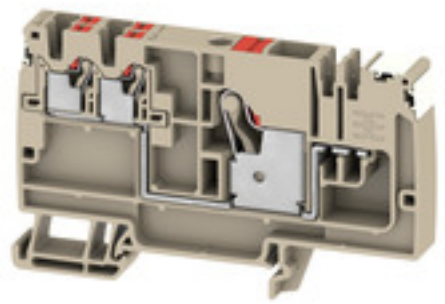

Control voltage distribution
Our tailored AAP potential distribution terminal blocks are ideal for surge current protection and central control voltage distribution. Meanwhile, our new maxGUARD range enables potential distribution with integrated electronic load monitoring in the smallest of installation spaces.

General ordering data

Version	Modular distribution terminals, PUSH IN, 10 mm², 800 V, 57 A, dark beige
Order No.	2675500000
Type	AAP12 10/4X2.5 LO-LI DL RD
GTIN (EAN)	4050118733914
Qty.	20 pc(s).

AAP12 10/4X2.5 LO-LI DL RD

Weidmüller Interface GmbH & Co. KG
Klingenbergstraße 26
D-32758 Detmold
Germany

www.weidmueller.com

Technical data

Dimensions and weights

Depth	53.5 mm	Depth (inches)	2.106 inch
Depth including DIN rail	54 mm	Height	89 mm
Height (inches)	3.504 inch	Width	10 mm
Width (inches)	0.394 inch	Net weight	32.833 g

Temperatures

Storage temperature	-25 °C...55 °C	Continuous operating temp., min.	-60 °C
Continuous operating temp., max.	130 °C		

Material data

Material	Wemid	Colour	dark beige
Colour of operational elements	orange	UL 94 flammability rating	V-0

Rating data IECEx/ATEX

Marking EN 60079-7	Ex ec II C Gc	Ex 2014/34/EU label	II 2 G D

System specifications

End cover plate required	Yes	Number of potentials	1
Number of levels	1	Number of clamping points per level	5
Number of potentials per tier	1	PE connection	No
Rail	TS 35	N-function	No
PE function	No	PEN function	No

Additional technical data

Explosion-tested version	Yes	Installation advice	Rail
Open sides	right	Snap-on	Yes
Type of fixing	Snap-on	Type of mounting	TS 35

Conductors for clamping (additional connection)

Blade size, additional connection	0.6 x 3.5 mm	Clamping range, further connection, max.	2.5 mm²
Clamping range, further connection, min.	0.14 mm²	Conductor cross-section, flexible plus plastic collar DIN 46228/1, further connection, max.	2.5 mm²
Conductor cross-section, flexible plus plastic collar DIN 46228/1, further connection, min.	0.5 mm²	Conductor cross-section, flexible, further connection, min.	0.5 mm²
Connection direction	top	Connection type, additional connection	PUSH IN
Cross-section for connected wire, flexible, further connection, max.	2.5 mm²	Cross-section for connected wire, multi-core, further connection, max.	2.5 mm²
Cross-section for connected wire, multi-core, further connection, min.	0.5 mm²	Cross-section for connected wire, solid-core, further connection, max.	2.5 mm²
Cross-section for connected wire, solid-core, further connection, min.	0.5 mm²	Number of connections, additional connection	4
Rated cross-section, further connection	2.5 mm²	Rated current, additional connection	24 A
Stripping length , additional connection	10 mm		

Conductors for clamping (rated connection)

Blade size	1.0 x 5.5 mm

AAP12 10/4X2.5 LO-LI DL RD

Weidmüller Interface GmbH & Co. KG
Klingenbergstraße 26
D-32758 Detmold
Germany

www.weidmueller.com

Technical data

Clamping range, max.	10 mm²		
Clamping range, min.	0.5 mm²		
Connection cross-section, stranded, max.	10 mm²		
Connection cross-section, stranded, min.	0.5 mm²		
Connection direction	top		
Gauge to IEC 60947-1	A6		
Number of connections	1		
Stripping length	18 mm		
Tube length for twin wire-end ferrule	Cross-section for conductor connection	min.	0.75 mm²
		max.	1 mm²
	Tube length	nominal	18 mm
	Cross-section for conductor connection	min.	1.5 mm²
		max.	4 mm²
	Tube length	min.	12 mm
		max.	18 mm
Tube length for wire-end ferrule with plastic collar DIN 46228/4	Cross-section for conductor connection	min.	1.5 mm²
		max.	4 mm²
	Tube length	min.	18 mm
	Cross-section for conductor connection	min.	6 mm²
		max.	10 mm²
	Tube length	min.	12 mm
		max.	18 mm
Tube length for wire-end ferrule without plastic collar DIN 46228/1	Tube length	nominal	18 mm
	Cross-section for conductor connection	min.	1.5 mm²
		max.	10 mm²
Twin wire-end ferrules, max.	4 mm²		
Twin wire-end ferrules, min.	0.5 mm²		
Type of connection	PUSH IN		
Wire connection cross section, finely stranded, max.	10 mm²		
Wire connection cross section, finely stranded, min.	0.5 mm²		
Wire connection cross-section, finely stranded with wire-end ferrules DIN 46228/1, max.	10 mm²		
Wire connection cross-section, finely stranded with wire-end ferrules DIN 46228/1, min.	0.5 mm²		
Wire connection cross-section, finely stranded with wire-end ferrules DIN 46228/4, max.	10 mm²		
Wire connection cross-section, finely stranded with wire-end ferrules DIN 46228/4, min.	0.5 mm²		
Wire connection cross-section, solid core, max.	10 mm²		
Wire connection cross-section, solid core, min.	0.5 mm²		

General

Installation advice	Rail	Number of poles	1
Rail	TS 35	Standards	IEC 60947-7-1

AAP12 10/4X2.5 LO-LI DL RD

Weidmüller Interface GmbH & Co. KG
Klingenbergstraße 26
D-32758 Detmold
Germany

www.weidmueller.com

Technical data

Rating data

Rated cross-section	10 mm²	Rated voltage	800 V
Rated DC voltage	800 V	Rated current	57 A
Current at maximum wires	57 A	Standards	IEC 60947-7-1
Volume resistance according to IEC 60947-7-x	0.56 mΩ	Rated impulse withstand voltage	8 kV
Power loss in accordance with IEC 60947-7-x	1.82 W	Pollution severity	3
Surge voltage category	III		

Classifications

ETIM 6.0	EC000897	ETIM 7.0	EC000897
ETIM 8.0	EC000897	ETIM 9.0	EC000897
ECLASS 9.0	27-14-11-20	ECLASS 9.1	27-14-11-20
ECLASS 10.0	27-14-11-20	ECLASS 11.0	27-14-11-20
ECLASS 12.0	27-14-11-20	ECLASS 13.0	27-25-01-19

Important note

Product information	The applicable safety regulations for the overload and short-circuit of the connected conductors must be followed. The total current of all connected conductors must not exceed the max. load current.

Approvals

Approvals

Downloads

Approval/Certificate/Document of Conformity	CE Declaration of Conformity UKCA declaration of conformity Confirmation of Standards EN 45545-2_2020-10
Engineering Data	CAD data – STEP
User Documentation	AAP Terminal Blocks for control voltage distribution
Catalogues	Catalogues in PDF-format

AAP12 10/4X2.5 LO-LI DL RD

Weidmüller Interface GmbH & Co. KG
Klingenbergstraße 26
D-32758 Detmold
Germany

www.weidmueller.com

Drawings

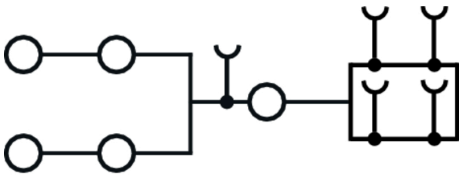

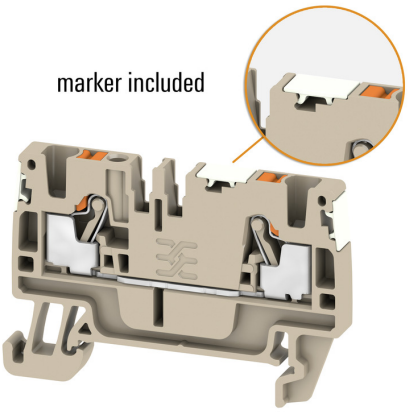

AAP12 10/4X2.5 LO-LI DL RD

Weidmüller Interface GmbH & Co. KG
Klingenbergstraße 26
D-32758 Detmold
Germany

www.weidmueller.com

Accessories

A-Series

Uniform inspection and test taps, consistent cross-connections, efficient markers, and timesaving PUSH IN connection technology make the A-Series particularly future-proof. The innovative design with clearly delineated functional areas and coloured pushers ensures maximum connection and maintenance safety.

General ordering data

Type	AEP AP12	Version
Order No.	1988300000	A-series, End plate
GTIN (EAN)	4050118372786	
Qty.	20 pc(s).	

Slotted screwdriver

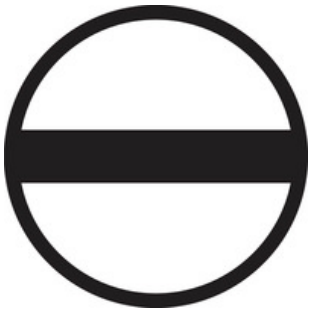

VDE insulated screwdriver sets, for working on live parts up to 1000 V AC and 1500 V DC, DIN EN 60900. IEC 900. Each piece is "GS" safety tested. Blade made from fully hardened, high-alloy chromium-vanadium-molybdenum steel, gun-metal finish.

General ordering data

Type	SDIS SLIM 0.6X3.5X100	Version
Order No.	2749610000	Mounting tool, Blade width (B): 3.5 mm, Blade length: 100 mm, Blade thickness (A): 0.6 mm
GTIN (EAN)	4050118896350	
Qty.	1 pc(s).	

AAP12 10/4X2.5 LO-LI DL RD

Weidmüller Interface GmbH & Co. KG
Klingenbergstraße 26
D-32758 Detmold
Germany

www.weidmueller.com

Accessories

A-Series

Weidmüller's range of products includes end brackets that guarantee a permanent, reliable mounting on the terminal rail and prevent sliding. Versions with and without screws are available. The end brackets include marking options, also for group markers, and also a test plug holder.

General ordering data

Type	AEB 35 SCL/1 V0	Version
Order No.	2661280000	A-series, End bracket
GTIN (EAN)	4050118702163	
Qty.	20 pc(s).	
Type	AEB 35 SCL/1 V0 GY	Version
Order No.	2661290000	A-series, End bracket
GTIN (EAN)	4050118702170	
Qty.	20 pc(s).	
Type	AEB 35 SC/1 BK	Version
Order No.	2475310000	A-series, End bracket
GTIN (EAN)	4050118487114	
Qty.	50 pc(s).	
Type	AEB 35 SC/1	Version
Order No.	1991920000	A-series, End bracket
GTIN (EAN)	4050118376722	
Qty.	50 pc(s).	
Type	AEB 35 SCL/1 V0 BK	Version
Order No.	2661300000	A-series, End bracket
GTIN (EAN)	4050118702187	
Qty.	20 pc(s).	

2.5 mm²

The plug-in cross-connections feature easy handling and quick installation. This saves a great deal of time during installation in comparison with screwed solutions.

General ordering data

Type	ZQV 2.5N/2 RD	Version
Order No.	2108470000	Cross-connector (terminal), Plugged, Number of poles: 2, Pitch in mm
GTIN (EAN)	4050118448542	(P): 5.10, Insulated: Yes, 24 A, red
Qty.	60 pc(s).	

AAP12 10/4X2.5 LO-LI DL RD

Weidmüller Interface GmbH & Co. KG
Klingenbergstraße 26
D-32758 Detmold
Germany

www.weidmueller.com

Accessories

Type	ZQV 2.5N/3 RD	Version
Order No.	2108690000	Cross-connector (terminal), Plugged, Number of poles: 3, Pitch in mm
GTIN (EAN)	4050118448535	(P): 5.10, Insulated: Yes, 24 A, red
Qty.	60 pc(s).	
Type	ZQV 2.5N/2	Version
Order No.	1527540000	Cross-connector (terminal), Plugged, Number of poles: 2, Pitch in mm
GTIN (EAN)	4050118448467	(P): 5.10, Insulated: Yes, 24 A, orange
Qty.	60 pc(s).	
Type	ZQV 2.5N/20	Version
Order No.	1527720000	Cross-connector (terminal), Plugged, Number of poles: 20, Pitch in mm
GTIN (EAN)	4050118447972	(P): 5.10, Insulated: Yes, 24 A, orange
Qty.	20 pc(s).	
Type	ZQV 2.5N/5	Version
Order No.	1527620000	Cross-connector (terminal), Plugged, Number of poles: 5, Pitch in mm
GTIN (EAN)	4050118448436	(P): 5.10, Insulated: Yes, 24 A, orange
Qty.	20 pc(s).	
Type	ZQV 2.5N/5 RD	Version
Order No.	2108710000	Cross-connector (terminal), Plugged, Number of poles: 5, Pitch in mm
GTIN (EAN)	4050118448511	(P): 5.10, Insulated: Yes, 24 A, red
Qty.	20 pc(s).	
Type	ZQV 2.5N/7	Version
Order No.	1527640000	Cross-connector (terminal), Plugged, Number of poles: 7, Pitch in mm
GTIN (EAN)	4050118448412	(P): 5.10, Insulated: Yes, 24 A, orange
Qty.	20 pc(s).	
Type	ZQV 2.5N/9 RD	Version
Order No.	2108900000	Cross-connector (terminal), Plugged, Number of poles: 9, Pitch in mm
GTIN (EAN)	4050118448474	(P): 5.10, Insulated: Yes, 24 A, red
Qty.	20 pc(s).	
Type	ZQV 2.5N/6 BL	Version
Order No.	1527820000	Cross-connector (terminal), Plugged, Number of poles: 6, Pitch in mm
GTIN (EAN)	4050118448610	(P): 5.10, Insulated: Yes, 24 A, blue
Qty.	20 pc(s).	
Type	ZQV 2.5N/50 BL	Version
Order No.	1527920000	Cross-connector (terminal), Plugged, Number of poles: 50, Pitch in mm
GTIN (EAN)	4050118448559	(P): 5.10, Insulated: Yes, 24 A, blue
Qty.	5 pc(s).	
Type	ZQV 2.5N/10	Version
Order No.	1527690000	Cross-connector (terminal), Plugged, Number of poles: 10, Pitch in mm
GTIN (EAN)	4050118447989	(P): 5.10, Insulated: Yes, 24 A, orange
Qty.	20 pc(s).	
Type	ZQV 2.5N/2 BL	Version
Order No.	1527740000	Cross-connector (terminal), Plugged, Number of poles: 2, Pitch in mm
GTIN (EAN)	4050118448658	(P): 5.10, Insulated: Yes, 24 A, blue
Qty.	60 pc(s).	
Type	ZQV 2.5N/10 BL	Version
Order No.	1527880000	Cross-connector (terminal), Plugged, Number of poles: 10, Pitch in mm
GTIN (EAN)	4050118448573	(P): 5.10, Insulated: Yes, 24 A, blue
Qty.	20 pc(s).	
Type	ZQV 2.5N/7 BL	Version
Order No.	1527830000	Cross-connector (terminal), Plugged, Number of poles: 7, Pitch in mm
GTIN (EAN)	4050118448603	(P): 5.10, Insulated: Yes, 24 A, blue
Qty.	20 pc(s).	

AAP12 10/4X2.5 LO-LI DL RD

Weidmüller Interface GmbH & Co. KG
Klingenbergstraße 26
D-32758 Detmold
Germany

www.weidmueller.com

Accessories

Type	ZQV 2.5N/3 BL	Version
Order No.	1527770000	Cross-connector (terminal), Plugged, Number of poles: 3, Pitch in mm
GTIN (EAN)	4050118448641	(P): 5.10, Insulated: Yes, 24 A, blue
Qty.	60 pc(s).	
Type	ZQV 2.5N/4 RD	Version
Order No.	2108700000	Cross-connector (terminal), Plugged, Number of poles: 4, Pitch in mm
GTIN (EAN)	4050118448528	(P): 5.10, Insulated: Yes, 24 A, red
Qty.	60 pc(s).	
Type	ZQV 2.5N/8 BL	Version
Order No.	1527840000	Cross-connector (terminal), Plugged, Number of poles: 8, Pitch in mm
GTIN (EAN)	4050118448597	(P): 5.10, Insulated: Yes, 24 A, blue
Qty.	20 pc(s).	
Type	ZQV 2.5N/50	Version
Order No.	1527730000	Cross-connector (terminal), Plugged, Number of poles: 50, Pitch in mm
GTIN (EAN)	4050118411362	(P): 5.10, Insulated: Yes, 24 A, orange
Qty.	5 pc(s).	
Type	ZQV 2.5N/20 RD	Version
Order No.	2108920000	Cross-connector (terminal), Plugged, Number of poles: 20, Pitch in mm
GTIN (EAN)	4050118485899	(P): 5.10, Insulated: Yes, 24 A, red
Qty.	20 pc(s).	
Type	ZQV 2.5N/10 RD	Version
Order No.	2108910000	Cross-connector (terminal), Plugged, Number of poles: 10, Pitch in mm
GTIN (EAN)	4050118486018	(P): 5.10, Insulated: Yes, 24 A, red
Qty.	20 pc(s).	
Type	ZQV 2.5N/8 RD	Version
Order No.	2108870000	Cross-connector (terminal), Plugged, Number of poles: 8, Pitch in mm
GTIN (EAN)	4050118448481	(P): 5.10, Insulated: Yes, 24 A, red
Qty.	20 pc(s).	
Type	ZQV 2.5N/9 BL	Version
Order No.	1527870000	Cross-connector (terminal), Plugged, Number of poles: 9, Pitch in mm
GTIN (EAN)	4050118448580	(P): 5.10, Insulated: Yes, 24 A, blue
Qty.	20 pc(s).	
Type	ZQV 2.5N/3	Version
Order No.	1527570000	Cross-connector (terminal), Plugged, Number of poles: 3, Pitch in mm
GTIN (EAN)	4050118448450	(P): 5.10, Insulated: Yes, 24 A, orange
Qty.	60 pc(s).	
Type	ZQV 2.5N/7 RD	Version
Order No.	2108810000	Cross-connector (terminal), Plugged, Number of poles: 7, Pitch in mm
GTIN (EAN)	4050118448498	(P): 5.10, Insulated: Yes, 24 A, red
Qty.	20 pc(s).	
Type	ZQV 2.5N/50 RD	Version
Order No.	2109000000	Cross-connector (terminal), Plugged, Number of poles: 50, Pitch in mm
GTIN (EAN)	4050118486001	(P): 5.10, Insulated: Yes, 24 A, red
Qty.	5 pc(s).	
Type	ZQV 2.5N/9	Version
Order No.	1527680000	Cross-connector (terminal), Plugged, Number of poles: 9, Pitch in mm
GTIN (EAN)	4050118447996	(P): 5.10, Insulated: Yes, 24 A, orange
Qty.	20 pc(s).	
Type	ZQV 2.5N/6 RD	Version
Order No.	2108720000	Cross-connector (terminal), Plugged, Number of poles: 6, Pitch in mm
GTIN (EAN)	4050118448504	(P): 5.10, Insulated: Yes, 24 A, red
Qty.	20 pc(s).	

AAP12 10/4X2.5 LO-LI DL RD

Weidmüller Interface GmbH & Co. KG
Klingenbergstraße 26
D-32758 Detmold
Germany

www.weidmueller.com

Accessories

Type	ZQV 2.5N/8	Version
Order No.	1527670000	Cross-connector (terminal), Plugged, Number of poles: 8, Pitch in mm
GTIN (EAN)	4050118448405	(P): 5.10, Insulated: Yes, 24 A, orange
Qty.	20 pc(s).	
Type	ZQV 2.5N/6	Version
Order No.	1527630000	Cross-connector (terminal), Plugged, Number of poles: 6, Pitch in mm
GTIN (EAN)	4050118448429	(P): 5.10, Insulated: Yes, 24 A, orange
Qty.	20 pc(s).	
Type	ZQV 2.5N/5 BL	Version
Order No.	1527790000	Cross-connector (terminal), Plugged, Number of poles: 5, Pitch in mm
GTIN (EAN)	4050118448627	(P): 5.10, Insulated: Yes, 24 A, blue
Qty.	20 pc(s).	
Type	ZQV 2.5N/4	Version
Order No.	1527590000	Cross-connector (terminal), Plugged, Number of poles: 4, Pitch in mm
GTIN (EAN)	4050118448443	(P): 5.10, Insulated: Yes, 24 A, orange
Qty.	60 pc(s).	
Type	ZQV 2.5N/20 BL	Version
Order No.	1527890000	Cross-connector (terminal), Plugged, Number of poles: 20, Pitch in mm
GTIN (EAN)	4050118448566	(P): 5.10, Insulated: Yes, 24 A, blue
Qty.	20 pc(s).	
Type	ZQV 2.5N/4 BL	Version
Order No.	1527780000	Cross-connector (terminal), Plugged, Number of poles: 4, Pitch in mm
GTIN (EAN)	4050118448634	(P): 5.10, Insulated: Yes, 24 A, blue
Qty.	60 pc(s).	

AAP12 10/4X2.5 LO-LI DL RD

Weidmüller Interface GmbH & Co. KG
Klingenbergstraße 26
D-32758 Detmold
Germany

www.weidmueller.com

Accessories

WS 8/10

WS/ DEK
MultiMark terminal markers use an innovative composite material made from two components. The hard base contour of the marker snaps securely into the connector. The elastic surface finish makes the marker easy to mount. This specially punched material enables the strips to be stretched to accommodate the slight variations in spacing that tend to add up, especially with long terminal blocks. Another advantage: the excellent printability of the surface material guarantees durable and wear-resistant labelling. A print resolution of 300 dpi also produces a very legible script.
Your benefits with MultiMark

- Firm hold and durable printing
- Continuous strips save installation time
- Easy mounting thanks to an innovative composite material
- Large label field for optimal legibility
- High flexibility thanks to manufacturer independence

General ordering data

Type	WS-A 8/10 MM WS	Version
Order No.	2619890000	WS, Terminal marker, 8 x 10 mm, Weidmueller, white
GTIN (EAN)	4050118626193	
Qty.	350 pc(s).	

A-Series

Warning covers with a flash symbol provide more safety for man and machine. They are used where external voltage must be indicated within the application.

General ordering data

Type	AAM 10 YE FLASH	Version
Order No.	2635580000	Terminal marker, 14 x 10 mm, yellow
GTIN (EAN)	4050118674521	
Qty.	40 pc(s).	

AAP12 10/4X2.5 LO-LI DL RD

Weidmüller Interface GmbH & Co. KG
Klingenbergstraße 26
D-32758 Detmold
Germany

www.weidmueller.com

Accessories

A-Series

Test adapters and test plugs are used for the electrical connection between terminal blocks and the test equipment. In this way, an electrical contact can be established in the wired state and measurements can be done easily.

General ordering data

Type	ATPG 6 MI-R	Version
Order No.	1991930000	Test adapter (terminal), 1.5 mm², 250 V, 0.2 A
GTIN (EAN)	4050118376555	
Qty.	50 pc(s).	
Type	ATPG 10 MI-R	Version
Order No.	1991870000	Test adapter (terminal), 1.5 mm², 250 V, 0.2 A
GTIN (EAN)	4050118376678	
Qty.	50 pc(s).	
Type	ATPG 1.5 MI-R	Version
Order No.	1991880000	Test adapter (terminal), 1.5 mm², 250 V, 0.2 A
GTIN (EAN)	4050118376715	
Qty.	50 pc(s).	
Type	ATPG 4 MI-R	Version
Order No.	1991860000	Test adapter (terminal), 1.5 mm², 250 V, 0.2 A
GTIN (EAN)	4050118376661	
Qty.	50 pc(s).	
Type	ATPG 2.5 MI-R	Version
Order No.	1991960000	Test adapter (terminal), 1.5 mm², 250 V, 0.2 A
GTIN (EAN)	4050118376685	
Qty.	50 pc(s).	
Type	ATPG 1.5-10 L	Version
Order No.	1991890000	Test adapter (terminal), 1.5 mm², 250 V, 0.2 A
GTIN (EAN)	4050118376647	
Qty.	50 pc(s).	

AAP12 10/4X2.5 LO-LI DL RD

Weidmüller Interface GmbH & Co. KG
Klingenbergstraße 26
D-32758 Detmold
Germany

www.weidmueller.com

Accessories

Marker holder

The marker holder offer the possibility of additional mounting of standard markers with a pitch of 5 or 5.1 mm. The angled holders can be optionally snaped together and could be mounted in all standard marking channels of the Klippon® Connect modular terminal blocks. Fitting marker types could be found under the respective accessories of the designation marking holder.

General ordering data

Type	BZT 1 ZA WS 10/5	Version
Order No.	1805520000	Accessories, Marker holder
GTIN (EAN)	4032248270248	
Qty.	100 pc(s).	
Type	BZT 1 WS 10/5	Version
Order No.	1805490000	Accessories, Marker holder
GTIN (EAN)	4032248270231	
Qty.	100 pc(s).	