SDL 4 FT

Weidmüller Interface GmbH & Co. KG
Klingenbergstraße 26
D-32758 Detmold
Germany

www.weidmueller.com

Product image

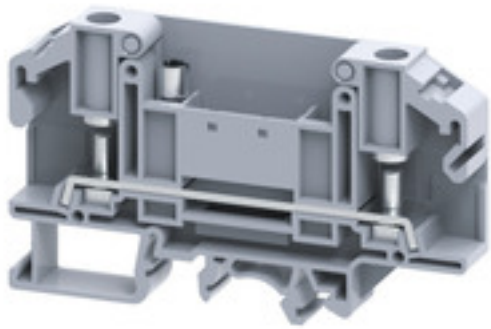

General ordering data

Version	Stud terminal, Threaded stud connection, 6 mm², 1000 V, 41 A, Number of connections: 2, M 4, TS 32, TS 35, grey
Order No.	2614970000
Type	SDL 4 FT
GTIN (EAN)	4050118654004
Qty.	50 pc(s).

SDL 4 FT

Weidmüller Interface GmbH & Co. KG
Klingenbergstraße 26
D-32758 Detmold
Germany

www.weidmueller.com

Technical data

Dimensions and weights

Depth	51.5 mm	Depth (inches)	2.028 inch
Depth including DIN rail	52.2 mm	Height	86 mm
Height (inches)	3.386 inch	Width	11 mm
Width (inches)	0.433 inch	Net weight	18.3 g

Temperatures

Storage temperature	-25 °C...55 °C	Continuous operating temp., min.	-50 °C
Continuous operating temp., max.	120 °C		

Material data

Material	Polyamide	Colour	grey

System specifications

End cover plate required	Yes	Number of potentials	1
Number of levels	1	Number of clamping points per level	2
Number of potentials per tier	1	Levels cross-connected internally	No
PE connection	No	Rail	TS 32, TS 35
N-function	No	PE function	No
PEN function	No		

Additional technical data

Explosion-tested version	No	Open sides	right
Snap-on	Yes	Type of fixing	Snap-on
Type of mounting	TS 32, TS 35		

CSA rating data

Certificate number (cCSAus)	70198655	Wire cross section max. (cCSAusX)	8 AWG
Wire cross section min. (cCSAusX)	22 AWG		

SDL 4 FT

Weidmüller Interface GmbH & Co. KG
Klingenbergstraße 26
D-32758 Detmold
Germany

www.weidmueller.com

Technical data

Conductors for clamping (rated connection)

2 x cable lugs DIN 46 234	1.5...6 mm²	2 x cable lugs DIN 46 235	1.5...6 mm²
Blade size	0.8 x 5.5 mm	Cable lug to DIN 46234	1.5...6 mm²
Cable lug to DIN 46235	1.5...6 mm²	Clamping range, bolted connection , max.	6 mm²
Clamping range, bolted connection , min.	1.5 mm²	Clamping range, max.	6 mm²
Clamping range, min.	1.5 mm²	Connection cross-section, stranded, max.	6 mm²
Connection cross-section, stranded, min.	1.5 mm²	Connection direction	on side
Number of connections	2	Stud size for spade connection	M 4
Tightening torque, max.	1.2 Nm	Tightening torque, min.	1.2 Nm
Type of connection	Threaded stud connection	Wire connection cross section AWG, max.	AWG 8
Wire connection cross section AWG, min.	AWG 22	Wire connection cross section, finely stranded, max.	6 mm²
Wire connection cross section, finely stranded, min.	1.5 mm²	Wire connection cross-section, finely stranded with wire-end ferrules DIN 46228/1, max.	1.5 mm²
Wire connection cross-section, finely stranded with wire-end ferrules DIN 46228/1, min.	1.5 mm²	Wire connection cross-section, finely stranded with wire-end ferrules DIN 46228/4, max.	6 mm²
Wire connection cross-section, finely stranded with wire-end ferrules DIN 46228/4, min.	1.5 mm²	Wire connection cross-section, solid core, max.	6 mm²
Wire connection cross-section, solid core, min.	1.5 mm²		

General

Rail	TS 32, TS 35	Standards	IEC 60947-7-1
Wire connection cross section AWG, max.	AWG 8	Wire connection cross section AWG, min.	AWG 22

Rating data

Rated cross-section	6 mm²	Rated voltage	1,000 V
Rated DC voltage	1,000 V	Rated current	41 A
Standards	IEC 60947-7-1	Volume resistance according to IEC 60947-7-x	0.78 mΩ
Rated impulse withstand voltage	8 kV	Power loss in accordance with IEC 60947-7-x	1.31 W
Pollution severity	3		

UL rating data

Certificate No. (cURus)	.	Conductor size Factory wiring max. (cURus)	8 AWG
Conductor size Factory wiring min. (cURus)	22 AWG	Conductor size Field wiring max. (cURus)	8 AWG
Conductor size Field wiring min. (cURus)	22 AWG	Current size B (cURus)	50 A
Current size C (cURus)	50 A	Voltage size B (cURus)	600 V
Voltage size C (cURus)	600 V		

SDL 4 FT

Weidmüller Interface GmbH & Co. KG
Klingenbergstraße 26
D-32758 Detmold
Germany

www.weidmueller.com

Technical data

Classifications

ETIM 6.0	EC000897	ETIM 7.0	EC000897
ETIM 8.0	EC000897	ETIM 9.0	EC000897
ECLASS 9.0	27-14-11-20	ECLASS 9.1	27-14-11-20
ECLASS 10.0	27-14-11-20	ECLASS 11.0	27-14-11-20
ECLASS 12.0	27-14-11-20	ECLASS 13.0	27-25-01-01

Approvals

Approvals	
ROHS	Conform
UL File Number Search	UL Website
Certificate No. (cURus)	.

Downloads

Approval/Certificate/Document of Conformity	CE Declaration of Conformity UKCA declaration of conformity
Engineering Data	CAD data – STEP
User Documentation	StorageConditionsTerminalBlocks
Catalogues	Catalogues in PDF-format

SDL 4 FT

Weidmüller Interface GmbH & Co. KG
Klingenbergstraße 26
D-32758 Detmold
Germany

www.weidmueller.com

Drawings

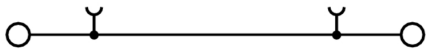

SDL 4 FT

Weidmüller Interface GmbH & Co. KG
Klingenbergstraße 26
D-32758 Detmold
Germany

www.weidmueller.com

Accessories

End plate

Current and voltage transformer wiring
Our test disconnect terminal blocks featuring spring and screw connection technology allow you to create all the important converter circuits for measuring current, voltage and power in a safe and sophisticated way.

General ordering data

Type	SEP SDL 4	Version
Order No.	2615020000	End plate (terminals), 86.1 mm x 1.5 mm
GTIN (EAN)	4050118653953	
Qty.	50 pc(s).	

Crimp cable lugs

Insulated cable connector in PVC or PC/PA
- Conventional designs
- Not soldered
- With conical entry funnel, except for joint connector

General ordering data

Type	KQI-M4/-0,5	Version
Order No.	1492110000	cable lug, terminal end,Insulated cable connector,0.5 mm²,0.1 mm² - 0.5 mm²
GTIN (EAN)	4050118302103	
Qty.	100 pc(s).	
Type	KQI-M4/-1	Version
Order No.	1492200000	cable lug, terminal end,Insulated cable connector,1 mm²,0.5 mm² - 1 mm²
GTIN (EAN)	4050118302301	
Qty.	100 pc(s).	
Type	KQI-M4/-2,5	Version
Order No.	1492290000	cable lug, terminal end,Insulated cable connector,2.5 mm²,1.5 mm² - 2.5 mm²
GTIN (EAN)	4050118302172	
Qty.	100 pc(s).	
Type	KQI-M4/-6	Version
Order No.	1492370000	cable lug, terminal end,Insulated cable connector,6 mm²,4 mm² - 6 mm²
GTIN (EAN)	4050118302264	
Qty.	100 pc(s).	

SDL 4 FT

Weidmüller Interface GmbH & Co. KG
Klingenbergstraße 26
D-32758 Detmold
Germany

www.weidmueller.com

Accessories

SRL-Series

Screwable cross-connections are easy to mount and de mount. Thanks to the big contact surface, even high currents can be transmitted with maximum contact reliability.

General ordering data

Type	SRQB 4/3	Version
Order No.	2615230000	Cross-connector (terminal), when screwed in, Number of poles: 3,
GTIN (EAN)	4050118653656	Pitch in mm (P): 11.00, Insulated: Yes, 41 A, black
Qty.	50 pc(s).	
Type	SQS 4/2	Version
Order No.	2615250000	Cross-connector (terminal), when screwed in, Number of poles: 2,
GTIN (EAN)	4050118653632	Pitch in mm (P): 11.00, Insulated: Yes, 41 A, black
Qty.	20 pc(s).	
Type	SRQB 4/2	Version
Order No.	2615220000	Cross-connector (terminal), when screwed in, Number of poles: 2,
GTIN (EAN)	4050118653663	Pitch in mm (P): 11.00, Insulated: Yes, 41 A, black
Qty.	100 pc(s).	
Type	SQS 4/4	Version
Order No.	2615260000	Cross-connector (terminal), when screwed in, Number of poles: 4,
GTIN (EAN)	4050118653625	Pitch in mm (P): 11.00, Insulated: Yes, 41 A, black
Qty.	10 pc(s).	
Type	SQB 4/3	Version
Order No.	2615150000	Cross-connector (terminal), when screwed in, Number of poles: 3,
GTIN (EAN)	4050118653830	Pitch in mm (P): 11.00, Insulated: Yes, 41 A, black
Qty.	50 pc(s).	
Type	SQB 4/4	Version
Order No.	2615160000	Cross-connector (terminal), when screwed in, Number of poles: 4,
GTIN (EAN)	4050118653823	Pitch in mm (P): 11.00, Insulated: Yes, 41 A, black
Qty.	50 pc(s).	
Type	SRQB 4/4	Version
Order No.	2615240000	Cross-connector (terminal), when screwed in, Number of poles: 4,
GTIN (EAN)	4050118653649	Pitch in mm (P): 11.00, Insulated: Yes, 41 A, black
Qty.	50 pc(s).	
Type	SQB 4/2	Version
Order No.	2615140000	Cross-connector (terminal), when screwed in, Number of poles: 2,
GTIN (EAN)	4050118653847	Pitch in mm (P): 11.00, Insulated: Yes, 41 A, black
Qty.	100 pc(s).	
Type	SQBA 4/3	Version
Order No.	2615170000	Cross-connector (terminal), when screwed in, Number of poles: 3,
GTIN (EAN)	4050118653816	Pitch in mm (P): 22.00, Insulated: Yes, 41 A, black
Qty.	10 pc(s).	

SDL 4 FT

Weidmüller Interface GmbH & Co. KG
Klingenbergstraße 26
D-32758 Detmold
Germany

www.weidmueller.com

Accessories

Type	SQBA 4/4	Version
Order No.	2615180000	Cross-connector (terminal), when screwed in, Number of poles: 4,
GTIN (EAN)	4050118653809	Pitch in mm (P): 22.00, Insulated: Yes, 41 A, black
Qty.	10 pc(s).	

Blank

WS markers are the perfect match for the W-series connectors. Thanks to their system compatibility, the WS tags can also be used with the I-series and the Z-series. The large marking surfaces do not only permit long character strings but also multi-line text.
WS markers are ideal for labels with long, customised character strings. Thanks to the proven MultiCard format, printing with PrintJet CONNECT oder/or Plotter is possible.
• Can be fitted in strips or individually
• Markers in proven MultiCard format

For custom printing: Please send us a file of our labeling software M-Print PRO or M-Print PRO Online (without installation) for your labeling specifications.

General ordering data

Type	WS 12/9.5-11 MC NE WS	Version
Order No.	2484220000	, Polyamide 66, Colour: white
GTIN (EAN)	4050118494808	
Qty.	300 pc(s).	