A4C 6 DL OR

Weidmüller Interface GmbH & Co. KG
Klingenbergstraße 26
D-32758 Detmold
Germany

www.weidmueller.com

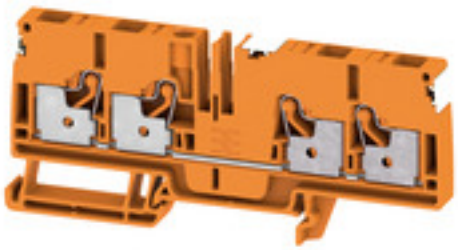

Spring connection with PUSH IN Technology
The innovative PUSH IN technology reduces the amount of time you spend on wiring to a minimum. Direct insertion guarantees high conductor pull-out forces and simple handling for all conductor types.

General ordering data

Version	Feed-through terminal, PUSH IN, 6 mm², 800 V, 41 A, orange
Order No.	2881520000
Type	A4C 6 DL OR
GTIN (EAN)	4064675674207
Qty.	50 pc(s).

A4C 6 DL OR

Weidmüller Interface GmbH & Co. KG
Klingenbergstraße 26
D-32758 Detmold
Germany

www.weidmueller.com

Technical data

Dimensions and weights

Depth	45.5 mm	Depth (inches)	1.791 inch
Height	102 mm	Height (inches)	4.016 inch
Width	8.1 mm	Width (inches)	0.319 inch
Net weight	23.28 g		

Temperatures

Storage temperature	-25 °C...55 °C	Continuous operating temp., min.	-60 °C
Continuous operating temp., max.	130 °C		

Material data

Material	Wemid	Colour	orange
Colour of operational elements	orange	UL 94 flammability rating	V-0

Rating data IECEx/ATEX

Certificate No. (ATEX)	TUEV16ATEX7909U	Certificate No. (IECEX)	IECEXTUR16.0036U
Max. voltage (ATEX)	550 V	Current (ATEX)	37 A
Wire cross section max. (ATEX)	6 mm²	Max. voltage (IECEX)	550 V
Current (IECEX)	37 A	Wire cross section max. (IECEX)	6 mm²

System specifications

End cover plate required	Yes	Number of potentials	1
Number of levels	1	Number of clamping points per level	4
Number of potentials per tier	1	Levels cross-connected internally	No
Rail	TS 35	N-function	No
PE function	No	PEN function	No

Additional technical data

Explosion-tested version	No	Open sides	right
Snap-on	Yes	Type of fixing	TS 35
Type of mounting	TS 35		

Conductors for clamping (additional connection)

Connection type, additional connection	PUSH IN

Conductors for clamping (rated connection)

Blade size	1.0 x 5.5 mm
Clamping range, max.	10 mm²
Clamping range, min.	0.34 mm²
Connection cross-section, stranded, max.	6 mm²
Connection cross-section, stranded, min.	0.5 mm²
Connection direction	top
Gauge to IEC 60947-1	A5
Number of connections	4
Stripping length	12 mm

Weidmüller

A4C 6 DL OR

Weidmüller Interface GmbH & Co. KG
Klingenbergstraße 26
D-32758 Detmold
Germany

www.weidmueller.com

Technical data

Tube length for twin wire-end ferrule	Cross-section for conductor connection	nominal	0.5 mm²
	Tube length	min.	10 mm
		max.	12 mm
	Cross-section for conductor connection	nominal	0.75 mm²
	Tube length	min.	10 mm
		max.	18 mm
	Cross-section for conductor connection	min.	1 mm²
		max.	1.5 mm²
	Tube length	min.	12 mm
		max.	18 mm
Tube length for wire-end ferrule with plastic collar DIN 46228/4	Cross-section for conductor connection	min.	0.5 mm²
		max.	1 mm²
	Tube length	min.	10 mm
		max.	12 mm
	Cross-section for conductor connection	nominal	1.5 mm²
	Tube length	min.	10 mm
		max.	18 mm
	Cross-section for conductor connection	nominal	2.5 mm²
	Tube length	min.	12 mm
		max.	18 mm
	Cross-section for conductor connection	min.	4 mm²
		max.	6 mm²
	Tube length	min.	10 mm
		max.	18 mm
Tube length for wire-end ferrule without plastic collar DIN 46228/1	Cross-section for conductor connection	min.	0.5 mm²
		max.	1 mm²
	Tube length	nominal	10 mm
	Cross-section for conductor connection	min.	1.5 mm²
		max.	2.5 mm²
	Tube length	min.	10 mm
	Cross-section for conductor connection	nominal	4 mm²
	Tube length	min.	12 mm
		max.	18 mm
	Cross-section for conductor connection	min.	6 mm²
		max.	10 mm²
	Tube length	min.	10 mm
		max.	18 mm

Twin wire-end ferrules, max.	1.5 mm²
Twin wire-end ferrules, min.	0.5 mm²
Type of connection	PUSH IN
Wire connection cross section AWG, max.	AWG 8
Wire connection cross section AWG, min.	AWG 22
Wire connection cross section, finely stranded, max.	10 mm²
Wire connection cross section, finely stranded, min.	0.5 mm²
Wire connection cross-section, finely stranded with wire-end ferrules DIN 46228/1, max.	10 mm²
Wire connection cross-section, finely stranded with wire-end ferrules DIN 46228/1, min.	0.5 mm²
Wire connection cross-section, finely stranded with wire-end ferrules DIN 46228/4, max.	6 mm²

A4C 6 DL OR

Weidmüller Interface GmbH & Co. KG
Klingenbergstraße 26
D-32758 Detmold
Germany

www.weidmueller.com

Technical data

Wire connection cross-section, finely stranded with wire-end ferrules DIN 46228/4, min.	0.5 mm²
Wire connection cross-section, solid core, max.	6 mm²
Wire connection cross-section, solid core, min.	0.5 mm²

General

Rail	TS 35	Standards	IEC 60947-7-1
Wire connection cross section AWG, max.	AWG 8	Wire connection cross section AWG, min.	AWG 22

Rating data

Rated cross-section	6 mm²	Rated voltage	800 V
Rated DC voltage	800 V	Rated current	41 A
Current at maximum wires	41 A	Standards	IEC 60947-7-1
Volume resistance according to IEC 60947-7-x	0.78 mΩ	Rated impulse withstand voltage	8 kV
Power loss in accordance with IEC 60947-7-x	1.31 W	Pollution severity	3
Surge voltage category	III		

UL rating data

Certificate No. (cURus)	E60693	Conductor size Factory wiring max. (cURus)	8 AWG
Conductor size Factory wiring min. (cURus)	22 AWG	Conductor size Field wiring max. (cURus)	8 AWG
Conductor size Field wiring min. (cURus)	22 AWG	Current size B (cURus)	38 A
Current size C (cURus)	38 A	Current size D (cURus)	5 A
Voltage size B (cURus)	600 V	Voltage size C (cURus)	600 V
Voltage size D (cURus)	600 V		

Classifications

ETIM 6.0	EC000897	ETIM 7.0	EC000897
ETIM 8.0	EC000897	ETIM 9.0	EC000897
ECLASS 9.0	27-14-11-20	ECLASS 9.1	27-14-11-20
ECLASS 10.0	27-14-11-20	ECLASS 11.0	27-14-11-20
ECLASS 12.0	27-14-11-20	ECLASS 13.0	27-25-01-01
ECLASS 14.0	27-25-01-01		

Environmental Product Compliance

REACH SVHC	/
RoHS Compliance Status	Compliant without exemption

A4C 6 DL OR

Weidmüller Interface GmbH & Co. KG
Klingenbergstraße 26
D-32758 Detmold
Germany

www.weidmueller.com

Technical data

Approvals

Approvals	
ROHS	Conform
UL File Number Search	UL Website
Certificate No. (cURus)	E60693

Downloads

Approval/Certificate/Document of Conformity	Attestation of Conformity CCC Ex Certificate 20-AV4BO-0269U CB Certificate CE Declaration of Conformity
Engineering Data	CAD data – STEP
Catalogues	Catalogues in PDF-format

A4C 6 DL OR

Weidmüller Interface GmbH & Co. KG
Klingenbergstraße 26
D-32758 Detmold
Germany

www.weidmueller.com

Drawings

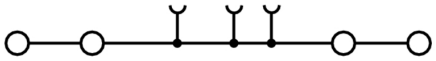

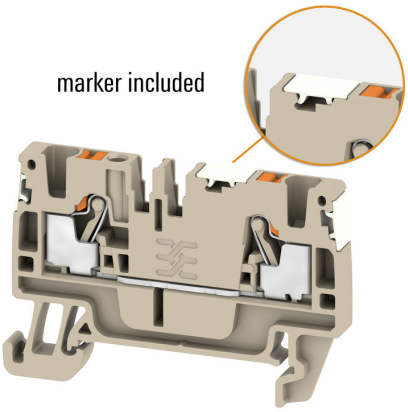

A4C 6 DL OR

Weidmüller Interface GmbH & Co. KG
Klingenbergstraße 26
D-32758 Detmold
Germany

www.weidmueller.com

Accessories

A-Series

Test adapters and test plugs are used for the electrical connection between terminal blocks and the test equipment. In this way, an electrical contact can be established in the wired state and measurements can be done easily.

General ordering data

Type	ATPG 6 MI-R	Version
Order No.	1991930000	Test adapter (terminal), 1.5 mm², 250 V, 0.2 A
GTIN (EAN)	4050118376555	
Qty.	50 pc(s).	
Type	ATPG 1.5-10 L	Version
Order No.	1991890000	Test adapter (terminal), 1.5 mm², 250 V, 0.2 A
GTIN (EAN)	4050118376647	
Qty.	50 pc(s).	

6 mm²

The plug-in cross-connections feature easy handling and quick installation. This saves a great deal of time during installation in comparison with screwed solutions.

General ordering data

Type	ZQV 6N/6	Version
Order No.	2733950000	Cross-connector (terminal), Plugged, orange, 41 A, Number of poles:
GTIN (EAN)	4064675066699	6, Pitch in mm (P): 8.00, Insulated: Yes, Width: 3.1 mm
Qty.	20 pc(s).	
Type	ZQV 6N/10 BL	Version
Order No.	2786910000	Cross-connector (terminal), Plugged, blue, 41 A, Number of poles: 10,
GTIN (EAN)	4064675064602	Pitch in mm (P): 8.00, Insulated: Yes, Width: 78.7 mm
Qty.	20 pc(s).	
Type	ZQV 6N/2	Version
Order No.	1985740000	Cross-connector (terminal), Plugged, orange, 41 A, Number of poles:
GTIN (EAN)	4050118370362	2, Pitch in mm (P): 8.00, Insulated: Yes, Width: 13.7 mm
Qty.	60 pc(s).	
Type	ZQV 6N/6 BL	Version
Order No.	2786890000	Cross-connector (terminal), Plugged, blue, 41 A, Number of poles: 6,
GTIN (EAN)	4064675064572	Pitch in mm (P): 8.00, Insulated: Yes, Width: 46.3 mm
Qty.	20 pc(s).	

A4C 6 DL OR

Weidmüller Interface GmbH & Co. KG
Klingenbergstraße 26
D-32758 Detmold
Germany

www.weidmueller.com

Accessories

Type	ZQV 6N/7	Version
Order No.	2733960000	Cross-connector (terminal), Plugged, orange, 41 A, Number of poles:
GTIN (EAN)	4064675066804	7, Pitch in mm (P): 8.00, Insulated: Yes, Width: 3.1 mm
Qty.	20 pc(s).	
Type	ZQV 6N/3 BL	Version
Order No.	1985840000	Cross-connector (terminal), Plugged, blue, 41 A, Number of poles: 3,
GTIN (EAN)	4050118370379	Pitch in mm (P): 8.00, Insulated: Yes, Width: 21.8 mm
Qty.	60 pc(s).	
Type	ZQV 6N/3	Version
Order No.	1985760000	Cross-connector (terminal), Plugged, orange, 41 A, Number of poles:
GTIN (EAN)	4050118370263	3, Pitch in mm (P): 8.00, Insulated: Yes, Width: 21.8 mm
Qty.	60 pc(s).	
Type	ZQV 6N/10	Version
Order No.	2733970000	Cross-connector (terminal), Plugged, orange, 41 A, Number of poles:
GTIN (EAN)	4064675066811	10, Pitch in mm (P): 8.00, Insulated: Yes, Width: 3.1 mm
Qty.	20 pc(s).	
Type	ZQV 6N/4	Version
Order No.	1985780000	Cross-connector (terminal), Plugged, orange, 41 A, Number of poles:
GTIN (EAN)	4050118370287	4, Pitch in mm (P): 8.00, Insulated: Yes, Width: 29.9 mm
Qty.	60 pc(s).	
Type	ZQV 6N/4 BL	Version
Order No.	1985850000	Cross-connector (terminal), Plugged, blue, 41 A, Number of poles: 4,
GTIN (EAN)	4050118370447	Pitch in mm (P): 8.00, Insulated: Yes, Width: 29.9 mm
Qty.	60 pc(s).	
Type	ZQV 6N/7 BL	Version
Order No.	2786900000	Cross-connector (terminal), Plugged, blue, 41 A, Number of poles: 7,
GTIN (EAN)	4064675064596	Pitch in mm (P): 8.00, Insulated: Yes, Width: 54.4 mm
Qty.	20 pc(s).	
Type	ZQV 6N/2 BL	Version
Order No.	1985830000	Cross-connector (terminal), Plugged, blue, 41 A, Number of poles: 2,
GTIN (EAN)	4050118370232	Pitch in mm (P): 8.00, Insulated: Yes, Width: 13.7 mm
Qty.	60 pc(s).	

Slotted screwdriver

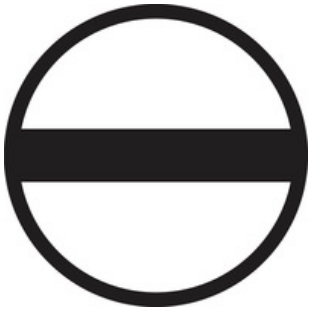

Slotted screwdriver with rounded blade SD DIN 5265, ISO 2380/2, output to DIN 5264, ISO 2380/1. ChromTop tip, SoftFinish grip

General ordering data

Type	SDS 1.0X5.5X150	Version
Order No.	2749380000	Screwdriver, Blade width (B): 5.5 mm, Blade length: 150 mm, Blade
GTIN (EAN)	4050118895605	thickness (A): 1 mm
Qty.	1 pc(s).	

A4C 6 DL OR

Weidmüller Interface GmbH & Co. KG
Klingenbergstraße 26
D-32758 Detmold
Germany

www.weidmueller.com

Accessories

A-Series

Weidmüller's range of products includes end brackets that guarantee a permanent, reliable mounting on the terminal rail and prevent sliding. Versions with and without screws are available. The end brackets include marking options, also for group markers, and also a test plug holder.

General ordering data

Type	AEB 35 SCL/1 V0 BK	Version
Order No.	2661300000	A-series, End bracket
GTIN (EAN)	4050118702187	
Qty.	20 pc(s).	
Type	AEB 35 SC/1	Version
Order No.	1991920000	A-series, End bracket
GTIN (EAN)	4050118376722	
Qty.	50 pc(s).	
Type	AEB 35 SCL/1 V0	Version
Order No.	2661280000	A-series, End bracket
GTIN (EAN)	4050118702163	
Qty.	20 pc(s).	
Type	AEB 35 SCL/1 V0 GY	Version
Order No.	2661290000	A-series, End bracket
GTIN (EAN)	4050118702170	
Qty.	20 pc(s).	
Type	AEB 35 SC/1 BK	Version
Order No.	2475310000	A-series, End bracket
GTIN (EAN)	4050118487114	
Qty.	50 pc(s).	

A-Series

A partition plate is used for the optical separation of circuits or used for electrical isolation from neighbouring cross-connectors. In contrast to the end plate, the contour can be larger than the adjacent terminal blocks. However, it should not be smaller, as otherwise the required clearance and creepage distances within the application can no longer be maintained.

General ordering data

Type	APP 2	Version
Order No.	2489090000	A-series, Partition plate
GTIN (EAN)	4050118499308	
Qty.	50 pc(s).	

A4C 6 DL OR

Weidmüller Interface GmbH & Co. KG
Klingenbergstraße 26
D-32758 Detmold
Germany

www.weidmueller.com

Accessories

Test plugs

Test adapters and test plugs are used for the electrical connection between terminal blocks and the test equipment. In this way, an electrical contact can be established in the wired state and measurements can be done easily.

General ordering data

Type	ZS 2.3/4	Version
Order No.	0249600000	Plug (terminal), Plug-in connection, red, Number of connections: 1,
GTIN (EAN)	4008190022785	V-2, Polyamide 66, Number of poles: 4, Width: 6.5 mm, Height: 6.5
Qty.	20 pc(s).	mm

6 mm²

End plates are fitted to the open side of the last modular terminal before the end bracket. The use of an end plate ensures the function of the modular terminal and the specified rated voltage. It guarantees protection against contact with live parts and makes the final terminal finger-proof.

General ordering data

Type	AEP 4C 6	Version
Order No.	2876180000	A-series, End plate
GTIN (EAN)	4064675663072	
Qty.	50 pc(s).	
Type	AEP 4C 6 OR	Version
Order No.	2876200000	A-series, End plate
GTIN (EAN)	4064675663096	
Qty.	50 pc(s).	
Type	AEP 4C 6 BL	Version
Order No.	2876190000	A-series, End plate
GTIN (EAN)	4064675663089	
Qty.	50 pc(s).	

A4C 6 DL OR

Weidmüller Interface GmbH & Co. KG
Klingenbergstraße 26
D-32758 Detmold
Germany

www.weidmueller.com

Accessories

Digital multimeters

Multimeters are capable of measuring a number of variables. Each instrument can measure voltage and resistance, as well as performing continuity and diode testing as standard.
In addition, the individual multimeters also feature extra measuring options such as current, frequency, capacitance and temperature. Digital multimeters have the advantage of a clear display which can be read easily and directly. With these instruments, mistakes arising from faulty conversion of the measuring ranges or misreading the display are a thing of the past.

General ordering data

Type	ZUB MULTIMETER	Version
Order No.	9205270000	Multimeter
GTIN (EAN)	4032248723522	
Qty.	1 pc(s).	

A-Series

Warning covers with a flash symbol provide more safety for man and machine. They are used where external voltage must be indicated within the application.

General ordering data

Type	AAM 6 YE FLASH	Version
Order No.	2635570000	Terminal marker, 13 x 8.1 mm, Pitch in mm (P): 8.00 yellow
GTIN (EAN)	4050118674514	
Qty.	40 pc(s).	