PVN DC 2I 1O 2MPP SPD2R WM4 11

Weidmüller Interface GmbH & Co. KG
Klingenbergstraße 26
D-32758 Detmold
Germany

www.weidmueller.com

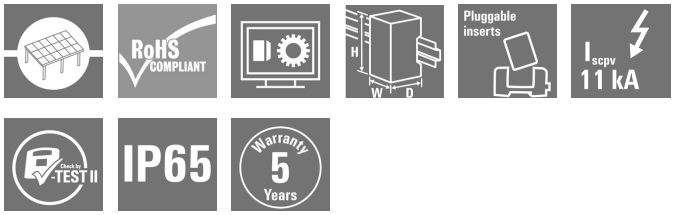

PV Next combiner boxes for inverters with 1 to 12 MPP trackers are used to protect the DC side of a photovoltaic system. The combiner boxes protect the inverter against overvoltages and thus comply with the European Directive EN 51543-32. In addition, these products offer the possibility to protect the system against reverse currents and the possibility to combine strings to save cables during installation.

General ordering data

Version	Photovoltaics, Combiner Box, 1100 V, 2 MPP's, 2 Inputs / 1 Output per MPP, Surge protection II, WM4C
Order No.	2866350000
Type	PVN DC 2I 1O 2MPP SPD2R WM4 11
GTIN (EAN)	4064675604037
Qty.	1 pc(s).
Replacement parts	2530660000

Creation date June 3, 2024 4:12:00 AM CEST

PVN DC 2I 1O 2MPP SPD2R WM4 11

Weidmüller Interface GmbH & Co. KG
Klingenbergstraße 26
D-32758 Detmold
Germany

www.weidmueller.com

Technical data

Dimensions and weights

Depth	132 mm	Depth (inches)	5.197 inch
Height	234 mm	Height (inches)	9.213 inch
Width	200 mm	Width (inches)	7.874 inch
Net weight	497 g		

Temperatures

Ambient temperature	-40 °C...+50 °C	Humidity	5...95 %, no condensation

Approvals and norms

Approvals	EN 61439-2, IEC 61439-2

Guarantee

Time interval	5 years

Electrical characteristics

Current per Maximum Power Point, max.	30 A	
Rated DC current per connection	Current per string, max.	30 A
Rated short-term current resistance	Rated current	37.5 A
Rated DC voltage	1,100 V	

Enclosure

Connection type string	Plug WM4C	Enclosure attachment	Via mounting foots
Impact resistance	IK08 in accordance with IEC 62208, IK10 in accordance with IEC 62262	Insulating material	Polyester glass-fibre reinforced, Polycarbonate
Protection class	II	Switch disconnector execution	no switch
Type of mounting	4 screws, Wall mounting		

General data

Installation location	Protected outdoor area (Land and Sea)	Protection degree	IP65

Inputs

Amount of maximum power points	2 MPP		
DC Input + & -	Wire connection	Type of connection	WM4C plug-in connector
		Compatible cable crossection	EN 50618:2015
		Wire cross-section, min.	4 mm²
		Wire cross-section, max.	6 mm²
	Cable entry	Number of cable entries	4

PVN DC 2I 1O 2MPP SPD2R WM4 11

Weidmüller Interface GmbH & Co. KG
Klingenbergstraße 26
D-32758 Detmold
Germany

www.weidmueller.com

Technical data

Functional earth connector	Cable entry	Number of cable entries	1
	Wire connection	Type of connection	Screw connection
		Flexible, max. H05(07) V-K	25 mm²
		w. wire end ferrule, DIN 46228 pt 1, max.	16 mm²
Fuse type	Neither fuse cartridge nor holder		
Max. number of DC inputs	per Maximum Power Point 2 inputs connected in parallel		
Surge protection auxiliary contact	Wire connection	Type of connection	Tension clamp connection with actuator
		Flexible, max. H05(07) V-K	1.5 mm²
		w. wire end ferrule, DIN 46228 pt 1, max.	1.5 mm²
	Cable entry	Number of cable entries	1

Outputs

DC Output + & -	Wire connection	Type of connection	WM4C plug-in connector
		Compatible cable crossection	TÜV 2 Pfg1169/08.07
		Wire cross-section, min.	4 mm²
		Wire cross-section, max.	6 mm²
Max. number of DC outputs	per Maximum Power Point 1 output		

Surge protection DC side

Discharge current I_n (8/20 µs)	20 kA	Discharge current, max. (8/20 µs)	40 kA
Maximum continuous operating voltage DC UCPV mode +/-, -/PE, +/PE	1,100 V	PV system voltage, max. U_{cpv}	1,100 V
Protection level U_p (+/-)	≤ 3.8 kV	Protection level U_p (+/PE)	≤ 3.8 kV
Protection level U_p (-/PE)	≤ 3.8 kV	Requirements class	Type II
Short-circuit curent I_{SCPV}	11,000 A	Standby power consumption P_C	<0.2 W
Total discharge current I_{total} (8/20µs)	50 kA		

Classifications

ETIM 6.0	EC002928	ETIM 7.0	EC002928
ETIM 8.0	EC003857	ETIM 9.0	EC003857
ECLASS 9.0	22-57-92-03	ECLASS 9.1	22-57-02-90
ECLASS 10.0	22-57-02-90	ECLASS 11.0	22-57-02-92
ECLASS 12.0	22-57-02-92	ECLASS 13.0	22-57-02-92

PVN DC 2I 1O 2MPP SPD2R WM4 11

Weidmüller Interface GmbH & Co. KG
Klingenbergstraße 26
D-32758 Detmold
Germany

www.weidmueller.com

Technical data

Tender specification sheets

Long specification	Combiner box for inverters with 2 MPP tracker, suitable for protecting the DC side of a photovoltaic system according to EN 51543-32. MPP1: 2 inputs, connection via WM4 C connector, compatible with cable type TÜV 2 Pfg1169/08.07 / EN 50618:2063 1 output, connection via WM4 C connector, compatible with cable type TÜV 2 Pfg1169/08.07 / EN 50618:2063 MPP2: identical to MPP1 Max. string voltage Uoc: 1100V 1 class/type II arrester with signal contact Connection of the signal contact via cable glands (8-12mmØ) max. conductor cross-section: 1.5mm² Connection of the functional earth via cable glands (8-12mmØ) Conductor cross-section: 16-25mm² Protection class: IP65 All built into a glas fibre reinforced polyester housing. Dimensions HxWxD: 234x200x132 mm Approval according to low voltage switchgear and controlgear IEC 61439-1:2011 and EN 61439-2:2011

Approvals

Approvals	CE

PVN DC 2I 1O 2MPP SPD2R WM4 11

Weidmüller Interface GmbH & Co. KG
Klingenbergstraße 26
D-32758 Detmold
Germany

www.weidmueller.com

Technical data

Downloads

Approval/Certificate/Document of Conformity	Declaration of Conformity for PV Next Mini 2
Engineering Data	CAD data – STEP
Technical Documentation	Customer drawing CAD data – Schematic Diagram for PV Next 2x 2In 1Out Boxes 2932700000_00_03-2023_DRILL-TEMP_PV-Next_20-20
User Documentation	Manual PV Next String Combiner Box MANUAL PV NEXT IT/ES/FR Instruction leaflet PV NEXT MINI
White paper	Fact Sheet DE PV CB Wie man Gebäude gegen Blitzeinschläge schützt Fact Sheet DE PV Wie man die Lebensdauer eines GAK verlängert Fact Sheet DE PV CB Wann Sicherungen zu installieren sind Fact Sheet DE CB PV NEXT Fact Sheet EN PV CB When DC fuses are mandatory to install Fact Sheet EN CB PV NEXT Fact Sheet EN PV How to protect buildings against lightning strikes Fact Sheet EN PV How to extend the life time of a Combiner Box Fact Sheet DE CB PV Strings kombinieren Fact Sheet DE PV CB Richtig verbinden Fact Sheet EN CB Combining PV strings Fact Sheet EN PV CB connection Fact Sheet EN PV Combiner Box earthing Fact Sheet DE PV Combiner Box Erdung
Catalogues	Catalogues in PDF-format

PVN DC 2I 1O 2MPP SPD2R WM4 11

Weidmüller Interface GmbH & Co. KG
Klingenbergstraße 26
D-32758 Detmold
Germany

www.weidmueller.com

Drawings

PCB design

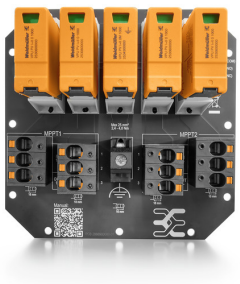

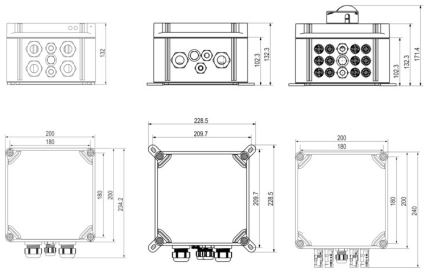

PVN DC 2I 1O 2MPP SPD2R WM4 11

Weidmüller Interface GmbH & Co. KG
Klingenbergstraße 26
D-32758 Detmold
Germany

www.weidmueller.com

Replacement parts

Spare Arrester

General ordering data

Type	VPU PV II 0 1000	Version
Order No.	2530660000	Surge voltage arrester, Low voltage, Accessories, Spare arrester
GTIN (EAN)	4050118540871	
Qty.	9 pc(s).	

PVN DC 2I 1O 2MPP SPD2R WM4 11

Weidmüller Interface GmbH & Co. KG
Klingenbergstraße 26
D-32758 Detmold
Germany

www.weidmueller.com

Accessories

Cutting tools

Cutting tools for conductors up to 8 mm, 12 mm, 14 mm and 22 mm outside diameter. The special blade geometry allows pinch-free cutting of copper and aluminium conductors with minimum physical effort. The cutting tools (KT 8 to KT 22) also come with VDE and GS-tested protective insulation up to 1,000 V in accordance with EN/IEC 60900.

General ordering data

Type	KT 14	Version
Order No.	1157820000	Cutting tools, Cutting tool for one-hand operation
GTIN (EAN)	4032248945344	
Qty.	1 pc(s).	

PV-Stick field connectors

Faster is better. This also applies to the cabling of solar systems. Our handy connectors stay firmly in your grip even in frosty temperatures and can be installed very quickly and easily without a crimping tool.
You don't need crimp contacts and crimping tools and you avoid assembly errors. This saves up to 50% installation time – without affecting quality. The new photovoltaic connectors are TÜV-approved and comply with IEC 62852.
Our "PUSH IN" technology enables safe connections with minimal effort – insert, turn: current!

- 1.500 V DC (DE) / 1,500 V DC (EN)
- PUSH IN technology
- Standard-compliant quality in accordance with IEC 62852
- Ergonomic, prize-winning design
- Fastest PV connector currently available
- Reliable latching

General ordering data

Type	PV-STICK+ VPE10	Version
Order No.	1303450000	Photovoltaics, Plug-in connector, PUSH IN connection, female
GTIN (EAN)	4050118102468	
Qty.	10 pc(s).	
Type	PV-STICK- VPE10	Version
Order No.	1303490000	Photovoltaics, Plug-in connector, PUSH IN connection, male
GTIN (EAN)	4050118102529	
Qty.	10 pc(s).	

PVN DC 2I 1O 2MPP SPD2R WM4 11

Weidmüller Interface GmbH & Co. KG
Klingenbergstraße 26
D-32758 Detmold
Germany

www.weidmueller.com

Accessories

Crosshead screwdriver Phillips

VDE insulated crosshead screwdriver, for Phillips screws, SDIK PH DIN 7438, ISO 8764/2-PH, output to ISO 8764-PH, SoftFinish grip

General ordering data

Type	SDIK PH3 X 150	Version
Order No.	2749910000	Screwdriver, Blade width (B): 3 mm, 150 mm, Blade thickness (A): 3
GTIN (EAN)	4050118897210	
Qty.	1 pc(s).	

Tools

- For flexible and solid conductors with special insulating materials
- High-quality stripping for industrial applications (complies with aircraft industry requirements)
- Specially shaped blades enable stripping of special types of insulation and conductor configurations
- Stripping length adjustable via end stop
- Very versatile thanks to interchangeable stripping units
- Stripping results reproduced accurately over and over again
- No damage to the conductor
- A long-lasting, reliable tool thanks to its sturdy design
- Integrated cutting function

General ordering data

Type	MULTI-STRIPAX PV	Version
Order No.	1190490000	Photovoltaics, Plug-in connector
GTIN (EAN)	4032248973262	
Qty.	1 pc(s).	

PVN DC 2I 1O 2MPP SPD2R WM4 11

Weidmüller Interface GmbH & Co. KG
Klingenbergstraße 26
D-32758 Detmold
Germany

www.weidmueller.com

Accessories

External fixing lugs

External attachment lugs 4-part set

General ordering data

Type	MF FPC	Version
Order No.	9536040000	FPC (polycarbonate empty enclosure), Mounting foot, Fixing lugs,
GTIN (EAN)	4032248009442	Height: 40 mm, Width: 19 mm, Depth: 35.5 mm, Material: Polyamide,
Qty.	1 pc(s).	Light Grey

Accessories

The dust protection cap "Dustcap VSSO" protects the Weidmüller and type 4 solar connectors against dust and dirt.
The "SafetyClip" protects the Weidmüller solar connectors against unintentional opening and can only be released using the special multi-tool.

General ordering data

Type	VSSO WM4 C	Version
Order No.	1254870000	Photovoltaics, Flat design
GTIN (EAN)	4050118047479	
Qty.	100 pc(s).	

PVN DC 2I 1O 2MPP SPD2R WM4 11

Weidmüller Interface GmbH & Co. KG
Klingenbergstraße 26
D-32758 Detmold
Germany

www.weidmueller.com

Accessories

UV-resistant cable ties

UV-resistant polyamide 6.6 ensures long durability of our special cable ties even with strong UV radiation. Ideal for continuous outdoor use.

General ordering data

Type	CB-UVR 290/4,5 BK	Version
Order No.	2659350000	Cable ties, 4.5 x 290 mm, Polyamide 66, 220 N
GTIN (EAN)	4050118682816	
Qty.	100 pc(s).	

Y-Connector Cables

The Y or X cable is used to connect three or four elements of a PV system, such as the connection between PV panels, inverters and surge protection boxes. The cables are available in different connection variants.

General ordering data

Type	PVHYM-M-XXXX6W+15	Version
Order No.	2877850000	Photovoltaics, Y-Connector Cable, 1x WM4 C Female, 2x MC4 Male,
GTIN (EAN)	4064675666417	6mm², 1500 V
Qty.	1 pc(s).	
Type	PVHYM+M+XXXX6W-15	Version
Order No.	2877860000	Photovoltaics, Y-Connector Cable, 1x WM4 C Male, 2x MC4 Female,
GTIN (EAN)	4064675666424	6mm², 1500 V
Qty.	1 pc(s).	

PVN DC 2I 1O 2MPP SPD2R WM4 11

Weidmüller Interface GmbH & Co. KG
Klingenbergstraße 26
D-32758 Detmold
Germany

www.weidmueller.com

Accessories

PV Sun Covers

General ordering data

Type	PV SUN COVER 30/19/18	Version
Order No.	8000086576	Photovoltaics
GTIN (EAN)	4064675845164	
Qty.	1 pc(s).	

Slotted screwdriver

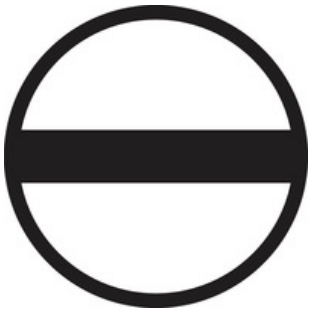

VDE insulated slot-head screwdriver, SDI DIN 7437, ISO 2380/2, drive output acc. to DIN 5264, ISO 2380/1. SoftFinish grip

General ordering data

Type	SDIS 0.6X3.5X100	Version
Order No.	2749810000	Screwdriver, Blade width (B): 3.5 mm, Blade length: 100 mm, Blade
GTIN (EAN)	4050118897012	thickness (A): 0.6 mm
Qty.	1 pc(s).	
Type	SDIS 1.0X5.5X125	Version
Order No.	2749850000	Screwdriver, Blade width (B): 5.5 mm, Blade length: 125 mm, Blade
GTIN (EAN)	4050118897050	thickness (A): 1 mm
Qty.	1 pc(s).	

PVN DC 2I 1O 2MPP SPD2R WM4 11

Weidmüller Interface GmbH & Co. KG
Klingenbergstraße 26
D-32758 Detmold
Germany

www.weidmueller.com

Drawings

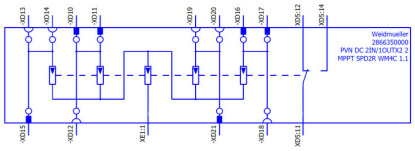

The reproduction, distribution and utilization of this document as well as the communication of its contents to others without explicit authorization is prohibited.
Offenders will be held liable for the payment of damages. Weidmueller exclusively reserves the right to file for patents, utility models or designs.
© Weidmueller Interface GmbH & Co. KG

The English version is binding

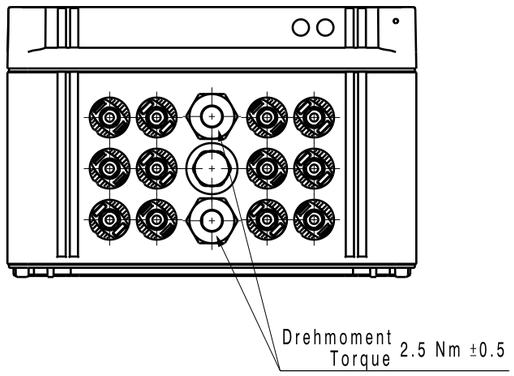

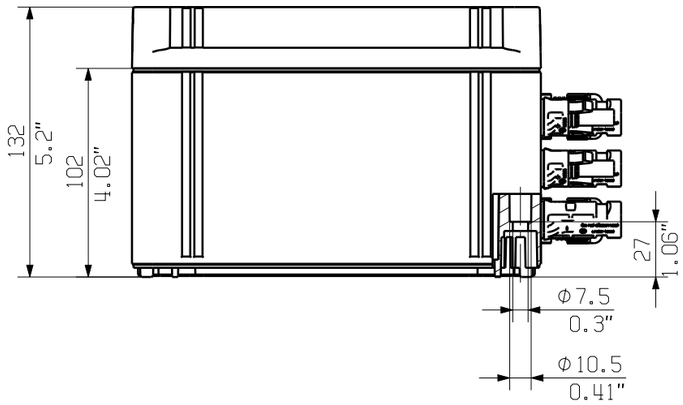

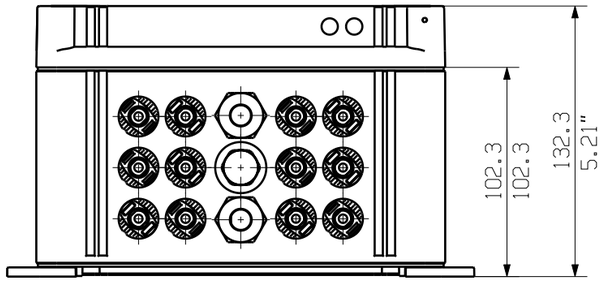

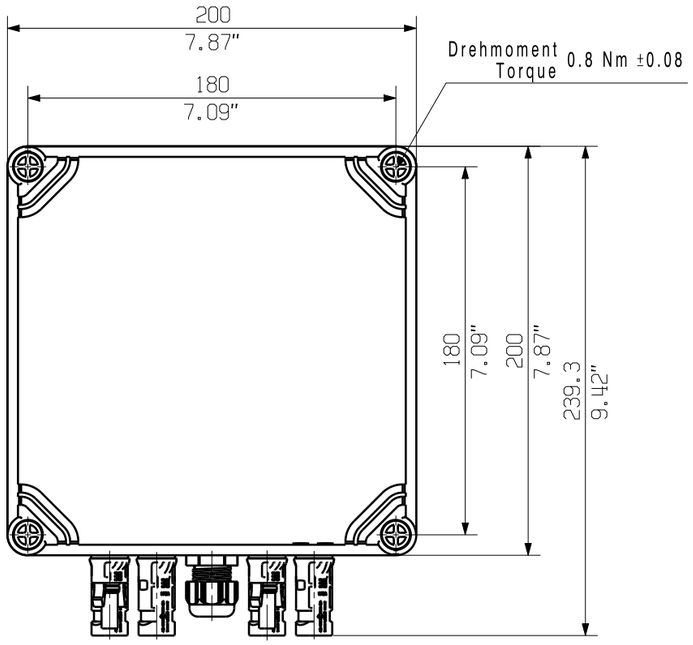

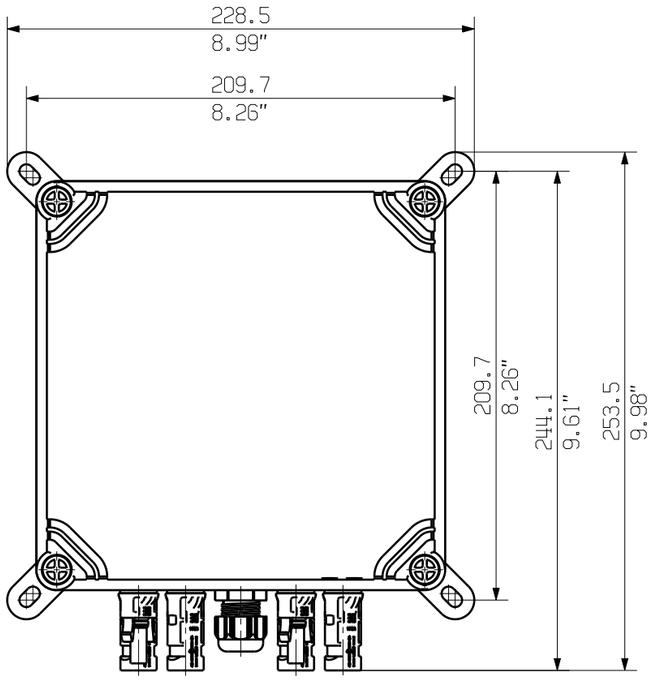

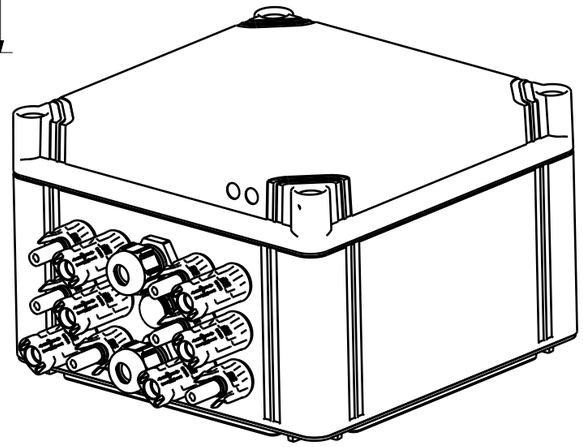

Darstellung mit Zubehoer
Shown with accessory 9536040000 MF FPC

Nicht im Lieferumfang enthalten!
Not included in delivery!

General Tolerances: WN700144-W.. / WN 212010 / ISO 2768-mK			Tolerances ISO 8015
Changes: EC00007387	0	Weidmüller	76337 (Drawing no.) 1 (Index)
Mat. No. (SAP) 2866340000			Scale: 1/3 Sheet 3 / 3
Drawings Assembly			
Drawn	Dreier, Bianca		2866340000 PVN DC 2IN/1OUTx2 2MPPT SPD1R WM4C 1.1kV
Responsible	Wohlgemuth, Klaus		COMBINERBOX RESIDENTIAL/COMMERCIAL
Approved	Püschner, Klaus	06.05.2022	COMBINERBOX RESIDENTIAL/COMMERCIAL

A3