# A2C 95/120 DL

**Weidmüller Interface GmbH & Co. KG**
Klingenbergstraße 26
D-32758 Detmold
Germany

www.weidmueller.com

## General ordering data

| | |
|---|---|
| Version | Feed-through terminal, PUSH IN, 95 mm², 1000 V, 232 A, dark beige |
| Order No. | 2742120000 |
| Type | A2C 95/120 DL |
| GTIN (EAN) | 4064675002789 |
| Qty. | 5 pc(s). |

# A2C 95/120 DL

**Weidmüller Interface GmbH & Co. KG**
Klingenbergstraße 26
D-32758 Detmold
Germany

www.weidmueller.com

## Technical data

### Dimensions and weights

| | | | |
|---|---|---|---|
| Depth | 90 mm | Depth (inches) | 3.543 inch |
| Height | 101.5 mm | Height (inches) | 3.996 inch |
| Width | 25 mm | Width (inches) | 0.984 inch |
| Net weight | 170 g | | |

### Temperatures

| | | | |
|---|---|---|---|
| Storage temperature | -25 °C...55 °C | Continuous operating temp., min. | -60 °C |
| Continuous operating temp., max. | 130 °C | | |

### Material data

| | | | |
|---|---|---|---|
| Material | Wemid | Colour | dark beige |
| Colour of operational elements | orange | UL 94 flammability rating | V-0 |

### Rating data IECEx/ATEX

| | | | |
|---|---|---|---|
| Certificate No. (ATEX) | TUEV16ATEX7909U | Certificate No. (IECEX) | IECEXTUR16.0036U |
| Max. voltage (ATEX) | 1100 V | Current (ATEX) | 211 A |
| Wire cross section max. (ATEX) | 120 mm² | Max. voltage (IECEX) | 1100 V |
| Current (IECEX) | 211 A | Wire cross section max. (IECEX) | 120 mm² |

### System specifications

| | | | |
|---|---|---|---|
| End cover plate required | No | Number of levels | 1 |
| Number of clamping points per level | 2 | Number of potentials per tier | 1 |
| Levels cross-connected internally | No | Rail | TS 35 |
| PEN function | No | | |

### Additional technical data

| | | | |
|---|---|---|---|
| Explosion-tested version | Yes | Open sides | closed |
| Type of fixing | TS 35 | Type of mounting | Snap-on |

### Conductors for clamping (additional connection)

| | |
|---|---|
| Connection type, additional connection | PUSH IN |

# A2C 95/120 DL

**Weidmüller Interface GmbH & Co. KG**
Klingenbergstraße 26
D-32758 Detmold
Germany

www.weidmueller.com

## Technical data

### Conductors for clamping (rated connection)

| | | | |
|---|---|---|---|
| Blade size | 1.0 x 5.5 mm | Clamping range, max. | 120 mm² |
| Clamping range, min. | 25 mm² | Connection cross-section, stranded, max. | 120 mm² |
| Connection cross-section, stranded, min. | 25 mm² | Connection direction | on side |
| Number of connections | 2 | Stripping length | 40 mm |
| Type of connection | PUSH IN | Wire connection cross section AWG, max. | AWG 3/0 |
| Wire connection cross section, finely stranded, max. | 120 mm² | Wire connection cross section, finely stranded, min. | 25 mm² |
| Wire connection cross-section, finely stranded with wire-end ferrules DIN 46228/1, max. | 95 mm² | Wire connection cross-section, finely stranded with wire-end ferrules DIN 46228/1, min. | 25 mm² |
| Wire connection cross-section, finely stranded with wire-end ferrules DIN 46228/4, max. | 95 mm² | Wire connection cross-section, finely stranded with wire-end ferrules DIN 46228/4, min. | 25 mm² |
| Wire connection cross-section, solid core, max. | 120 mm² | Wire connection cross-section, solid core, min. | 25 mm² |

### General

| | | | |
|---|---|---|---|
| Rail | TS 35 | Standards | IEC 60947-7-1 |
| Wire connection cross section AWG, max. | AWG 3/0 | | |

### Rating data

| | | | |
|---|---|---|---|
| Rated cross-section | 95 mm² | Rated voltage | 1,000 V |
| Rated DC voltage | 1,500 V | Rated current | 232 A |
| Current at maximum wires | 232 A | Standards | IEC 60947-7-1 |
| Rated impulse withstand voltage | 8 kV | Power loss in accordance with IEC 60947-7-x | 7.42 W |
| Pollution severity | 3 | Surge voltage category | III |

### Classifications

| | | | |
|---|---|---|---|
| ETIM 6.0 | EC000897 | ETIM 7.0 | EC000897 |
| ETIM 8.0 | EC000897 | ETIM 9.0 | EC000897 |
| ECLASS 9.0 | 27-14-11-20 | ECLASS 9.1 | 27-14-11-20 |
| ECLASS 10.0 | 27-14-11-20 | ECLASS 11.0 | 27-14-11-20 |
| ECLASS 12.0 | 27-14-11-20 | ECLASS 13.0 | 27-25-01-01 |

### Important note

| | |
|---|---|
| Product information | The max. connectable wire reduces by one wire size if a cross connector is used that has to be mounted in the wire entry. |

### Approvals

Approvals

# A2C 95/120 DL

**Weidmüller Interface GmbH & Co. KG**
Klingenbergstraße 26
D-32758 Detmold
Germany

www.weidmueller.com

## Technical data

### Downloads

| | |
|---|---|
| Approval/Certificate/Document of Conformity | Attestation of Conformity<br>UKCA Ex Attestation of Conformity<br>IECEx Certificate<br>ATEX Certificate<br>DNVGL certificate<br>CB Testreport<br>CB Certificate<br>UKCA Ex Certificate<br>CE Declaration of Conformity<br>UKCA declaration of conformity<br>Confirmation of Standards EN 45545-2_2020-10 |
| Engineering Data | CAD data – STEP |
| User Documentation | NTI A2C 95/120 |
| Catalogues | Catalogues in PDF-format |

## A2C 95/120 DL

**Weidmüller Interface GmbH & Co. KG**
Klingenbergstraße 26
D-32758 Detmold
Germany

www.weidmueller.com

## Drawings

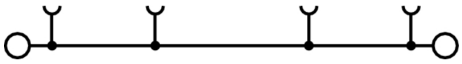

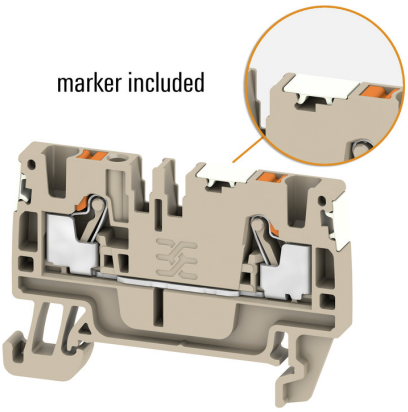


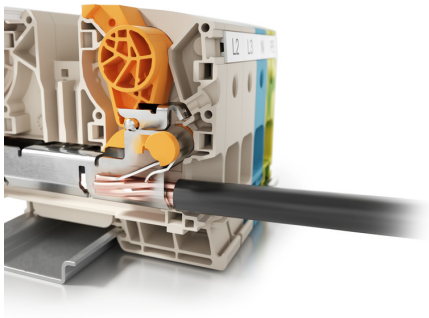

# A2C 95/120 DL

**Weidmüller Interface GmbH & Co. KG**
Klingenbergstraße 26
D-32758 Detmold
Germany

www.weidmueller.com

## Accessories

### 95/120 mm²

**Power feed-in**
Our wide range of W-Series terminal blocks with our WPD main line branch terminals, which are optimised to guarantee both convenience and space gains, ensures a secure and convenient connection at the power feed-in.

### General ordering data

| | | |
|---|---|---|
| Type | ZQV 95/120N/2 | Version |
| Order No. | 2694250000 | Cross-connector (terminal), Plugged, Number of poles: 2, Pitch in mm |
| GTIN (EAN) | 4064675266563 | (P): 25.00, Insulated: Yes, 192 A, orange |
| Qty. | 10 pc(s). | |
| Type | ZQV 95/120N/3 | Version |
| Order No. | 2694260000 | Cross-connector (terminal), 192 A, orange |
| GTIN (EAN) | 4064675266570 | |
| Qty. | 10 pc(s). | |

### A-Series

**Power feed-in**
Our wide range of W-Series terminal blocks with our WPD main line branch terminals, which are optimised to guarantee both convenience and space gains, ensures a secure and convenient connection at the power feed-in.

### General ordering data

| | | |
|---|---|---|
| Type | AAC 50-185 2X10 | Version |
| Order No. | 2663420000 | Auxiliary connection (terminal), 10 mm², Number of connections: 2 |
| GTIN (EAN) | 4064675027966 | |
| Qty. | 5 pc(s). | |
| Type | AAC 50-185 2X10 BL | Version |
| Order No. | 2663430000 | Auxiliary connection (terminal), 10 mm², Number of connections: 2 |
| GTIN (EAN) | 4064675027973 | |
| Qty. | 5 pc(s). | |
| Type | AAC 50-185 2X10 GN-YL | Version |
| Order No. | 2663440000 | Auxiliary connection (terminal), 10 mm², Number of connections: 2 |
| GTIN (EAN) | 4064675027980 | |
| Qty. | 5 pc(s). | |
| Type | AAC 50-185 2X10 BK-YL | Version |
| Order No. | 2663450000 | Auxiliary connection (terminal), 10 mm², Number of connections: 2 |
| GTIN (EAN) | 4064675027997 | |
| Qty. | 5 pc(s). | |

# A2C 95/120 DL

**Weidmüller Interface GmbH & Co. KG**
Klingenbergstraße 26
D-32758 Detmold
Germany

www.weidmueller.com

## Accessories

### A-Series

Weidmüller's range of products includes end brackets that guarantee a permanent, reliable mounting on the terminal rail and prevent sliding. Versions with and without screws are available. The end brackets include marking options, also for group markers, and also a test plug holder.

### General ordering data

| | | |
|---|---|---|
| Type | AEB 35 SCL/1 V0 GY | Version |
| Order No. | 2661290000 | A-series, End bracket |
| GTIN (EAN) | 4050118702170 | |
| Qty. | 20 pc(s). | |
| Type | AEB 35 SC/1 | Version |
| Order No. | 1991920000 | A-series, End bracket |
| GTIN (EAN) | 4050118376722 | |
| Qty. | 50 pc(s). | |
| Type | AEB 35 SC/1 BK | Version |
| Order No. | 2475310000 | A-series, End bracket |
| GTIN (EAN) | 4050118487114 | |
| Qty. | 50 pc(s). | |
| Type | AEB 35 SCL/1 V0 | Version |
| Order No. | 2661280000 | A-series, End bracket |
| GTIN (EAN) | 4050118702163 | |
| Qty. | 20 pc(s). | |
| Type | AEB 35 SCL/1 V0 BK | Version |
| Order No. | 2661300000 | A-series, End bracket |
| GTIN (EAN) | 4050118702187 | |
| Qty. | 20 pc(s). | |