ADT 4 2C DL

Weidmüller Interface GmbH & Co. KG
Klingenbergstraße 26
D-32758 Detmold
Germany

www.weidmueller.com

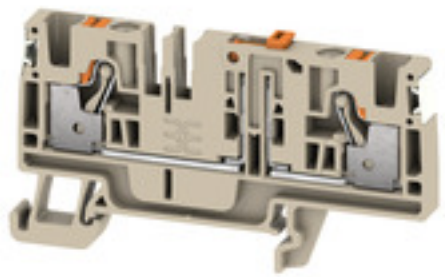

Spring connection with PUSH IN Technology
The innovative PUSH IN technology reduces the amount of time you spend on wiring to a minimum. Direct insertion guarantees high conductor pull-out forces and simple handling for all conductor types.

General ordering data

Version	Test-disconnect terminal, PUSH IN, 4 mm², 500 V, 20 A, dark beige
Order No.	2675240000
Type	ADT 4 2C DL
GTIN (EAN)	4050118817560
Qty.	50 pc(s).

ADT 4 2C DL

Weidmüller Interface GmbH & Co. KG
Klingenbergstraße 26
D-32758 Detmold
Germany

www.weidmueller.com

Technical data

Dimensions and weights

Depth	41 mm	Depth (inches)	1.614 inch
Depth including DIN rail	42 mm	Height	74 mm
Height (inches)	2.913 inch	Width	6.1 mm
Width (inches)	0.24 inch	Net weight	13.31 g

Temperatures

Storage temperature	-25 °C...55 °C	Continuous operating temp., min.	-60 °C
Continuous operating temp., max.	130 °C		

Material data

Material	Wemid	Colour	dark beige
Colour of operational elements	orange	UL 94 flammability rating	V-0

Rating data IECEx/ATEX

Certificate No. (ATEX)	TUEV16ATEX7939U	Certificate No. (IECEX)	IECEXTUR16.0045U
Max. voltage (ATEX)	440 V	Current (ATEX)	18.5 A
Wire cross section max. (ATEX)	4 mm²	Max. voltage (IECEX)	400 V
Current (IECEX)	18.5 A	Wire cross section max. (IECEX)	4 mm²

System specifications

End cover plate required	Yes	Number of potentials	1
Number of levels	1	Number of clamping points per level	2
Number of potentials per tier	1	Levels cross-connected internally	No
PE connection	No	Rail	TS 35

Additional technical data

Open sides	right	Snap-on	Yes
Type of mounting	TS 35		

Conductors for clamping (additional connection)

Connection type, additional connection	PUSH IN

Conductors for clamping (rated connection)

Blade size	0.6 x 3.5 mm		
Clamping range, max.	6 mm²		
Clamping range, min.	0.14 mm²		
Connection cross-section, stranded, max.	6 mm²		
Connection cross-section, stranded, min.	0.5 mm²		
Gauge to IEC 60947-1	A4		
Number of connections	2		
Stripping length	10 mm		
Tube length for twin wire-end ferrule	Tube length	max.	12 mm
		min.	8 mm
	Cross-section for conductor connection	min.	0.5 mm²
		max.	1.5 mm²

ADT 4 2C DL

Weidmüller Interface GmbH & Co. KG
Klingenbergstraße 26
D-32758 Detmold
Germany

www.weidmueller.com

Technical data

Tube length for wire-end ferrule with plastic collar DIN 46228/4	Tube length	max.	12 mm
		min.	6 mm
	Cross-section for conductor connection	min.	0.5 mm²
		max.	1 mm²
	Tube length	max.	12 mm
		min.	8 mm
	Cross-section for conductor connection	min.	1.5 mm²
		max.	2.5 mm²
	Tube length	max.	12 mm
		min.	10 mm
	Cross-section for conductor connection	nominal	4 mm²
Tube length for wire-end ferrule without plastic collar DIN 46228/1	Cross-section for conductor connection	min.	0.5 mm²
		max.	1 mm²
	Tube length	max.	10 mm
		min.	6 mm
	Cross-section for conductor connection	min.	1.5 mm²
		max.	2.5 mm²
	Tube length	max.	12 mm
		min.	7 mm
	Cross-section for conductor connection	min.	4 mm²
		max.	6 mm²
	Tube length	max.	15 mm
		min.	9 mm
Twin wire-end ferrules, max.	1.5 mm²		
Twin wire-end ferrules, min.	0.5 mm²		
Type of connection	PUSH IN		
Type of connection 2	PUSH IN		
Wire connection cross section AWG, max.	AWG 12		
Wire connection cross section AWG, min.	AWG 26		
Wire connection cross section, finely stranded, max.	6 mm²		
Wire connection cross section, finely stranded, min.	0.5 mm²		
Wire connection cross-section, finely stranded with wire-end ferrules DIN 46228/1, max.	6 mm²		
Wire connection cross-section, finely stranded with wire-end ferrules DIN 46228/1, min.	0.5 mm²		
Wire connection cross-section, finely stranded with wire-end ferrules DIN 46228/4, max.	4 mm²		
Wire connection cross-section, finely stranded with wire-end ferrules DIN 46228/4, min.	0.5 mm²		
Wire connection cross-section, solid core, max.	4 mm²		
Wire connection cross-section, solid core, min.	0.5 mm²		

General

Rail	TS 35	Standards	IEC 60947-7-1
Wire connection cross section AWG, max.	AWG 12	Wire connection cross section AWG, min.	AWG 26

ADT 4 2C DL

Weidmüller Interface GmbH & Co. KG
Klingenbergstraße 26
D-32758 Detmold
Germany

www.weidmueller.com

Technical data

Rating data

Rated cross-section	4 mm²	Rated voltage	500 V
Rated DC voltage	500 V	Rated current	20 A
Current at maximum wires	20 A	Standards	IEC 60947-7-1
Volume resistance according to IEC 60947-7-x	1 mΩ	Rated impulse withstand voltage	4 kV
Power loss in accordance with IEC 60947-7-x	1.02 W	Pollution severity	3
Surge voltage category	III		

Classifications

ETIM 6.0	EC000902	ETIM 7.0	EC000902
ETIM 8.0	EC000902	ETIM 9.0	EC000902
ECLASS 9.0	27-14-11-26	ECLASS 9.1	27-14-11-26
ECLASS 10.0	27-14-11-26	ECLASS 11.0	27-14-11-26
ECLASS 12.0	27-14-11-26	ECLASS 13.0	27-25-01-09

Approvals

Approvals

ROHS	Conform
UL File Number Search	UL Website
Certificate No. (cURusEX)	E184763

Downloads

Approval/Certificate/Document of Conformity	Attestation of Conformity CE Declaration of Conformity UKCA declaration of conformity Confirmation of Standards EN 45545-2_2020-10
Engineering Data	CAD data – STEP
Catalogues	Catalogues in PDF-format

ADT 4 2C DL

Weidmüller Interface GmbH & Co. KG
Klingenbergstraße 26
D-32758 Detmold
Germany

www.weidmueller.com

Drawings

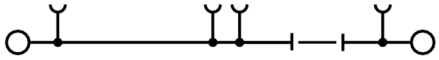

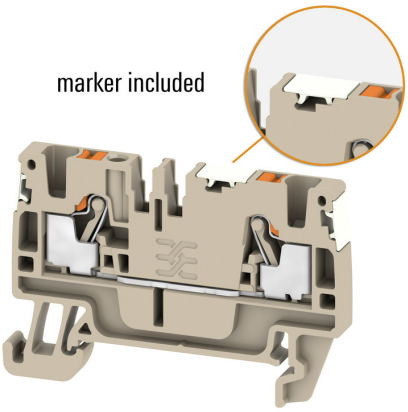

ADT 4 2C DL

Weidmüller Interface GmbH & Co. KG
Klingenbergstraße 26
D-32758 Detmold
Germany

www.weidmueller.com

Accessories

A-Series

A partition plate is used for the optical separation of circuits or used for electrical isolation from neighbouring cross-connectors. In contrast to the end plate, the contour can be larger than the adjacent terminal blocks. However, it should not be smaller, as otherwise the required clearance and creepage distances within the application can no longer be maintained.

General ordering data

Type	APP 2	Version
Order No.	2489090000	A-series, Partition plate
GTIN (EAN)	4050118499308	
Qty.	50 pc(s).	

Blank

WS markers are the perfect match for the W-series connectors. Thanks to their system compatibility, the WS tags can also be used with the I-series and the Z-series. The large marking surfaces do not only permit long character strings but also multi-line text.
WS markers are ideal for labels with long, customised character strings. Thanks to the proven MultiCard format, printing with PrintJet CONNECT oder/or Plotter is possible.
- Can be fitted in strips or individually
- Markers in proven MultiCard format

For custom printing: Please send us a file of our labeling software M-Print PRO or M-Print PRO Online (without installation) for your labeling specifications.

General ordering data

Type	WS 8/6 PLUS MC NE WS	Version
Order No.	1951880000	WS, Terminal marker, 8 x 6 mm, Pitch in mm (P): 6.00 Weidmueller,
GTIN (EAN)	4032248632114	white
Qty.	600 pc(s).	

ADT 4 2C DL

Weidmüller Interface GmbH & Co. KG
Klingenbergstraße 26
D-32758 Detmold
Germany

www.weidmueller.com

Accessories

Plus

The Dekafix (DEK) marker is the universal marker for all conductor and plug-in connectors as well as for electronic sub-assemblies. The system is ideal for short number sequences and covers a wide range of ready-printed markers.
Strips for fast installation in only one work step. The printing is easy to read, rich in contrast and available in various widths.

- Large range of ready-to-use markers
- Strips for fast installation
- Terminal markers, suitable for all Weidmüller cable connectors
- Available as blank MultiCard or with standard printing

For custom printing: Please send us a file of our labeling software M-Print PRO or M-Print PRO Online (without installation) for your labeling specifications.

General ordering data

Type	DEK 5/6 PLUS MC NE WS	Version
Order No.	1011320000	Dekafix, Terminal marker, 5 x 6 mm, Pitch in mm (P): 6.00
GTIN (EAN)	4032248717644	Weidmueller, white
Qty.	1,000 pc(s).	

4 mm²

End plates are fitted to the open side of the last modular terminal before the end bracket. The use of an end plate ensures the function of the modular terminal and the specified rated voltage. It guarantees protection against contact with live parts and makes the final terminal finger-proof.

General ordering data

Type	AEP 3C 4 BL	Version
Order No.	2051880000	A-series, End plate
GTIN (EAN)	4050118411836	
Qty.	20 pc(s).	
Type	AEP 3C 4	Version
Order No.	2051720000	A-series, End plate
GTIN (EAN)	4050118411829	
Qty.	20 pc(s).	
Type	AEP 3C 4 OR	Version
Order No.	2051890000	A-series, End plate
GTIN (EAN)	4050118411799	
Qty.	20 pc(s).	

ADT 4 2C DL

Weidmüller Interface GmbH & Co. KG
Klingenbergstraße 26
D-32758 Detmold
Germany

www.weidmueller.com

Accessories

Fuse holder

The fuse holder SIHA quickly turns a disconnect terminal into a fuse terminal: simply remove the disconnect lever and attach the fuse unit.

General ordering data

Type	SIHA 3/G20 BL	Version
Order No.	1004260000	Fuse holder for feed-through modular terminal, pluggable
GTIN (EAN)	4032248709717	
Qty.	25 pc(s).	
Type	SIHA 3/G20	Version
Order No.	7926190000	Fuse holder for feed-through modular terminal, pluggable
GTIN (EAN)	4032248264612	
Qty.	1,000 pc(s).	
Type	SIHA 3/G20/LD 10-36V BL	Version
Order No.	1005250000	Fuse holder for feed-through modular terminal, 2.31 A, pluggable
GTIN (EAN)	4032248712038	
Qty.	25 pc(s).	
Type	SIHA 3/G20	Version
Order No.	7921560000	Fuse holder for feed-through modular terminal, pluggable
GTIN (EAN)	4032248264643	
Qty.	25 pc(s).	
Type	SIHA 3/G20/LD 35-70V	Version
Order No.	7921580000	Fuse holder for feed-through modular terminal, 2.31 mA, pluggable
GTIN (EAN)	4032248322619	
Qty.	25 pc(s).	
Type	SIHA 3/G20/LD 60-150V	Version
Order No.	7921590000	Fuse holder for feed-through modular terminal, 2.31 mA, pluggable
GTIN (EAN)	4032248322626	
Qty.	25 pc(s).	
Type	SIHA 3/G20/LD 10-36V	Version
Order No.	7921570000	Fuse holder for feed-through modular terminal, 2.31 mA, pluggable
GTIN (EAN)	4032248322503	
Qty.	25 pc(s).	
Type	SIHA 3/G20/LD 140-250V	Version
Order No.	7921600000	Fuse holder for feed-through modular terminal, 2.31 mA, pluggable
GTIN (EAN)	4032248322633	
Qty.	25 pc(s).	

ADT 4 2C DL

Weidmüller Interface GmbH & Co. KG
Klingenbergstraße 26
D-32758 Detmold
Germany

www.weidmueller.com

Accessories

Switch lock

General ordering data

Type	DTLE 2.5/4	Version
Order No.	2910530000	Locking element (terminal), Wemid, red
GTIN (EAN)	4099986519466	
Qty.	25 pc(s).	

Marker holder

The marker holder offer the possibility of additional mounting of standard markers with a pitch of 5 or 5.1 mm. The angled holders can be optionally snaped together and could be mounted in all standard marking channels of the Klippon® Connect modular terminal blocks. Fitting marker types could be found under the respective accessories of the designation marking holder.

General ordering data

Type	BZT 1 WS 10/5	Version
Order No.	1805490000	Accessories, Marker holder
GTIN (EAN)	4032248270231	
Qty.	100 pc(s).	
Type	BZT 1 ZA WS 10/5	Version
Order No.	1805520000	Accessories, Marker holder
GTIN (EAN)	4032248270248	
Qty.	100 pc(s).	

ADT 4 2C DL

Weidmüller Interface GmbH & Co. KG
Klingenbergstraße 26
D-32758 Detmold
Germany

www.weidmueller.com

Accessories

WS 8/6

WS/ DEK
MultiMark terminal markers use an innovative composite material made from two components. The hard base contour of the marker snaps securely into the connector. The elastic surface finish makes the marker easy to mount. This specially punched material enables the strips to be stretched to accommodate the slight variations in spacing that tend to add up, especially with long terminal blocks. Another advantage: the excellent printability of the surface material guarantees durable and wear-resistant labelling. A print resolution of 300 dpi also produces a very legible script.
Your benefits with MultiMark

- Firm hold and durable printing
- Continuous strips save installation time
- Easy mounting thanks to an innovative composite material
- Large label field for optimal legibility
- High flexibility thanks to manufacturer independence

General ordering data

Type	WS 8/6 MM WS	Version
Order No.	2007160000	WS, Terminal marker, 8 x 6 mm, Weidmueller, white
GTIN (EAN)	4050118391879	
Qty.	600 pc(s).	

ADT 4 2C DL

Weidmüller Interface GmbH & Co. KG
Klingenbergstraße 26
D-32758 Detmold
Germany

www.weidmueller.com

Accessories

Blank

The Dekafix (DEK) marker is the universal marker for all conductor and plug-in connectors as well as for electronic sub-assemblies. The system is ideal for short number sequences and covers a wide range of ready-printed markers.
Strips for fast installation in only one work step. The printing is easy to read, rich in contrast and available in various widths.

- Large range of ready-to-use markers
- Strips for fast installation
- Terminal markers, suitable for all Weidmüller cable connectors
- Available as blank MultiCard or with standard printing

For custom printing: Please send us a file of our labeling software M-Print PRO or M-Print PRO Online (without installation) for your labeling specifications.

General ordering data

Type	DEK 5/6 MC NE GN	Version
Order No.	1238310000	Dekafix, Terminal marker, 5 x 6 mm, Pitch in mm (P): 6.00
GTIN (EAN)	4050118271812	Weidmueller, green
Qty.	1,000 pc(s).	
Type	DEK 5/6 MC NE BR	Version
Order No.	1454900000	Dekafix, Terminal marker, 5 x 6 mm, Pitch in mm (P): 6.00
GTIN (EAN)	4050118323313	Weidmueller, brown
Qty.	1,000 pc(s).	
Type	DEK 5/6 MC NE OR	Version
Order No.	1912090000	Dekafix, Terminal marker, 5 x 6 mm, Pitch in mm (P): 6.00
GTIN (EAN)	4032248540525	Weidmueller, orange
Qty.	1,000 pc(s).	
Type	DEK 5/6 MC NE GR	Version
Order No.	1238330000	Dekafix, Terminal marker, 5 x 6 mm, Pitch in mm (P): 6.00
GTIN (EAN)	4050118323306	Weidmueller, grey
Qty.	1,000 pc(s).	
Type	DEK 5/6 MC NE WS	Version
Order No.	1609820000	Dekafix, Terminal marker, 5 x 6 mm, Pitch in mm (P): 6.00
GTIN (EAN)	4008190203436	Weidmueller, white
Qty.	1,000 pc(s).	
Type	DEK 5/6 MC NE GE	Version
Order No.	1238280000	Dekafix, Terminal marker, 5 x 6 mm, Pitch in mm (P): 6.00
GTIN (EAN)	4050118038750	Weidmueller, yellow
Qty.	1,000 pc(s).	
Type	DEK 5/6 MC NE BL	Version
Order No.	1238290000	Dekafix, Terminal marker, 5 x 6 mm, Pitch in mm (P): 6.00
GTIN (EAN)	4050118267327	Weidmueller, blue
Qty.	1,000 pc(s).	

ADT 4 2C DL

Weidmüller Interface GmbH & Co. KG
Klingenbergstraße 26
D-32758 Detmold
Germany

www.weidmueller.com

Accessories

A-Series

Warning covers with a flash symbol provide more safety for man and machine. They are used where external voltage must be indicated within the application.

General ordering data

Type	AAM 4 YE FLASH	Version
Order No.	2635560000	Terminal marker, 10 x 6.1 mm, Pitch in mm (P): 6.00 yellow
GTIN (EAN)	4050118674507	
Qty.	40 pc(s).	

Custom printing

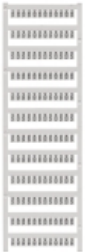

WS markers are the perfect match for the W-series connectors. Thanks to their system compatibility, the WS tags can also be used with the I-series and the Z-series. The large marking surfaces do not only permit long character strings but also multi-line text.
WS markers are ideal for labels with long, customised character strings. Thanks to the proven MultiCard format, printing with PrintJet CONNECT oder/or Plotter is possible.
- Can be fitted in strips or individually
- Markers in proven MultiCard format

For custom printing: Please send us a file of our labeling software M-Print PRO or M-Print PRO Online (without installation) for your labeling specifications.

General ordering data

Type	WS 8/6 PLUS MC SDR	Version
Order No.	1038820000	WS, Terminal marker, 8 x 6 mm, Pitch in mm (P): 6.00 Weidmueller,
GTIN (EAN)	4032248768073	To customer specification
Qty.	120 pc(s).	

ADT 4 2C DL

Weidmüller Interface GmbH & Co. KG
Klingenbergstraße 26
D-32758 Detmold
Germany

www.weidmueller.com

Accessories

Custom printing

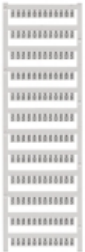

WS markers are the perfect match for the W-series connectors. Thanks to their system compatibility, the WS tags can also be used with the I-series and the Z-series. The large marking surfaces do not only permit long character strings but also multi-line text.
WS markers are ideal for labels with long, customised character strings. Thanks to the proven MultiCard format, printing with PrintJet CONNECT oder/or Plotter is possible.
• Can be fitted in strips or individually
• Markers in proven MultiCard format

For custom printing: Please send us a file of our labeling software M-Print PRO or M-Print PRO Online (without installation) for your labeling specifications.

General ordering data

Type	WS 10/6 M PLUS MC SDR	Version
Order No.	2007780000	WS, Terminal marker, 10 x 6 mm, Pitch in mm (P): 6.00 Weidmueller,
GTIN (EAN)	4050118393187	Allen-Bradley, To customer specification
Qty.	120 pc(s).	
Type	WS 10/6 MC SDR	Version
Order No.	1828460000	WS, Terminal marker, 10 x 6 mm, Pitch in mm (P): 6.00 Weidmueller,
GTIN (EAN)	4032248367399	Allen-Bradley, To customer specification
Qty.	120 pc(s).	
Type	WS 10/6 PLUS MC SDR	Version
Order No.	1046330000	WS, Terminal marker, 10 x 6 mm, Pitch in mm (P): 6.00 Weidmueller,
GTIN (EAN)	4032248782031	Allen-Bradley, To customer specification
Qty.	120 pc(s).	
Type	WS 10/6 MC M SDR	Version
Order No.	1818410000	WS, Terminal marker, 10 x 6 mm, Pitch in mm (P): 6.00 Weidmueller,
GTIN (EAN)	4032248310883	Allen-Bradley, To customer specification
Qty.	120 pc(s).	

A-Series

Weidmüller's range of products includes end brackets that guarantee a permanent, reliable mounting on the terminal rail and prevent sliding. Versions with and without screws are available. The end brackets include marking options, also for group markers, and also a test plug holder.

General ordering data

Type	AEB 35 SCL/1 V0 GY	Version
Order No.	2661290000	A-series, End bracket
GTIN (EAN)	4050118702170	
Qty.	20 pc(s).	

ADT 4 2C DL

Weidmüller Interface GmbH & Co. KG
Klingenbergstraße 26
D-32758 Detmold
Germany

www.weidmueller.com

Accessories

Type	AEB 35 SC/1 BK	Version
Order No.	2475310000	A-series, End bracket
GTIN (EAN)	4050118487114	
Qty.	50 pc(s).	

Type	AEB 35 SC/1	Version
Order No.	1991920000	A-series, End bracket
GTIN (EAN)	4050118376722	
Qty.	50 pc(s).	

Type	AEB 35 SCL/1 V0 BK	Version
Order No.	2661300000	A-series, End bracket
GTIN (EAN)	4050118702187	
Qty.	20 pc(s).	

Type	AEB 35 SCL/1 V0	Version
Order No.	2661280000	A-series, End bracket
GTIN (EAN)	4050118702163	
Qty.	20 pc(s).	

Slotted screwdriver

VDE insulated screwdriver sets, for working on live parts up to 1000 V AC and 1500 V DC, DIN EN 60900. IEC 900. Each piece is "GS" safety tested. Blade made from fully hardened, high-alloy chromium-vanadium-molybdenum steel, gun-metal finish.

General ordering data

Type	SDIS SLIM 0.6X3.5X100	Version
Order No.	2749610000	Mounting tool, Blade width (B): 3.5 mm, Blade length: 100 mm, Blade
GTIN (EAN)	4050118896350	thickness (A): 0.6 mm
Qty.	1 pc(s).	

4 mm²

The plug-in cross-connections feature easy handling and quick installation. This saves a great deal of time during installation in comparison with screwed solutions.

General ordering data

Type	ZQV 4N/8	Version
Order No.	1528030000	Cross-connector (terminal), Plugged, Number of poles: 8, Pitch in mm
GTIN (EAN)	4050118332841	(P): 6.10, Insulated: Yes, 32 A, orange
Qty.	20 pc(s).	

ADT 4 2C DL

Weidmüller Interface GmbH & Co. KG
Klingenbergstraße 26
D-32758 Detmold
Germany

www.weidmueller.com

Accessories

Type	ZQV 4N/5	Version
Order No.	1527980000	Cross-connector (terminal), Plugged, Number of poles: 5, Pitch in mm
GTIN (EAN)	4050118332759	(P): 6.10, Insulated: Yes, 32 A, orange
Qty.	60 pc(s).	
Type	ZQV 4N/50 BL	Version
Order No.	1528240000	Cross-connector (terminal), Plugged, Number of poles: 50, Pitch in mm
GTIN (EAN)	4050118333121	(P): 6.10, Insulated: Yes, 32 A, blue
Qty.	5 pc(s).	
Type	ZQV 4N/7 BL	Version
Order No.	1528180000	Cross-connector (terminal), Plugged, Number of poles: 7, Pitch in mm
GTIN (EAN)	4050118333114	(P): 6.10, Insulated: Yes, 32 A, blue
Qty.	20 pc(s).	
Type	ZQV 4N/4	Version
Order No.	1527970000	Cross-connector (terminal), Plugged, Number of poles: 4, Pitch in mm
GTIN (EAN)	4050118332889	(P): 6.10, Insulated: Yes, 32 A, orange
Qty.	60 pc(s).	
Type	ZQV 4N/3	Version
Order No.	1527940000	Cross-connector (terminal), Plugged, Number of poles: 3, Pitch in mm
GTIN (EAN)	4050118332865	(P): 6.10, Insulated: Yes, 32 A, orange
Qty.	60 pc(s).	
Type	ZQV 4N/10	Version
Order No.	1528090000	Cross-connector (terminal), Plugged, Number of poles: 10, Pitch in mm
GTIN (EAN)	4050118332896	(P): 6.10, Insulated: Yes, 32 A, orange
Qty.	20 pc(s).	
Type	ZQV 4N/6 BL	Version
Order No.	1528170000	Cross-connector (terminal), Plugged, Number of poles: 6, Pitch in mm
GTIN (EAN)	4050118332926	(P): 6.10, Insulated: Yes, 32 A, blue
Qty.	20 pc(s).	
Type	ZQV 4N/3 BL	Version
Order No.	1528080000	Cross-connector (terminal), Plugged, Number of poles: 3, Pitch in mm
GTIN (EAN)	4050118333008	(P): 6.10, Insulated: Yes, 32 A, blue
Qty.	60 pc(s).	
Type	ZQV 4N/4 BL	Version
Order No.	1528120000	Cross-connector (terminal), Plugged, Number of poles: 4, Pitch in mm
GTIN (EAN)	4050118332872	(P): 6.10, Insulated: Yes, 32 A, blue
Qty.	60 pc(s).	
Type	ZQV 4N/2	Version
Order No.	1527930000	Cross-connector (terminal), Plugged, Number of poles: 2, Pitch in mm
GTIN (EAN)	4050118332766	(P): 6.10, Insulated: Yes, 32 A, orange
Qty.	60 pc(s).	
Type	ZQV 4N/10 BL	Version
Order No.	1528230000	Cross-connector (terminal), Plugged, Number of poles: 10, Pitch in mm
GTIN (EAN)	4050118333138	(P): 6.10, Insulated: Yes, 32 A, blue
Qty.	20 pc(s).	
Type	ZQV 4N/5 BL	Version
Order No.	1528140000	Cross-connector (terminal), Plugged, Number of poles: 5, Pitch in mm
GTIN (EAN)	4050118333015	(P): 6.10, Insulated: Yes, 32 A, blue
Qty.	60 pc(s).	
Type	ZQV 4N/8 BL	Version
Order No.	1528190000	Cross-connector (terminal), Plugged, Number of poles: 8, Pitch in mm
GTIN (EAN)	4050118332858	(P): 6.10, Insulated: Yes, 32 A, blue
Qty.	20 pc(s).	

ADT 4 2C DL

Weidmüller Interface GmbH & Co. KG
Klingenbergstraße 26
D-32758 Detmold
Germany

www.weidmueller.com

Accessories

Type	ZQV 4N/50	Version
Order No.	1528130000	Cross-connector (terminal), Plugged, Number of poles: 50, Pitch in mm
GTIN (EAN)	4050118332902	(P): 6.10, Insulated: Yes, 32 A, orange
Qty.	5 pc(s).	
Type	ZQV 4N/2 BL	Version
Order No.	1528040000	Cross-connector (terminal), Plugged, Number of poles: 2, Pitch in mm
GTIN (EAN)	4050118332773	(P): 6.10, Insulated: Yes, 32 A, blue
Qty.	60 pc(s).	
Type	ZQV 4N/9	Version
Order No.	1528070000	Cross-connector (terminal), Plugged, Number of poles: 9, Pitch in mm
GTIN (EAN)	4050118332797	(P): 6.10, Insulated: Yes, 32 A, orange
Qty.	20 pc(s).	
Type	ZQV 4N/6	Version
Order No.	1527990000	Cross-connector (terminal), Plugged, Number of poles: 6, Pitch in mm
GTIN (EAN)	4050118332919	(P): 6.10, Insulated: Yes, 32 A, orange
Qty.	20 pc(s).	
Type	ZQV 4N/7	Version
Order No.	1528020000	Cross-connector (terminal), Plugged, Number of poles: 7, Pitch in mm
GTIN (EAN)	4050118332780	(P): 6.10, Insulated: Yes, 32 A, orange
Qty.	20 pc(s).	
Type	ZQV 4N/9 BL	Version
Order No.	1528220000	Cross-connector (terminal), Plugged, Number of poles: 9, Pitch in mm
GTIN (EAN)	4050118333107	(P): 6.10, Insulated: Yes, 32 A, blue
Qty.	20 pc(s).	

Custom printing

The Dekafix (DEK) marker is the universal marker for all conductor and plug-in connectors as well as for electronic sub-assemblies. The system is ideal for short number sequences and covers a wide range of ready-printed markers.
Strips for fast installation in only one work step. The printing is easy to read, rich in contrast and available in various widths.

- Large range of ready-to-use markers
- Strips for fast installation
- Terminal markers, suitable for all Weidmüller cable connectors
- Available as blank MultiCard or with standard printing

For custom printing: Please send us a file of our labeling software M-Print PRO or M-Print PRO Online (without installation) for your labeling specifications.

General ordering data

Type	DEK 5/6 MC SDR	Version
Order No.	1609830000	Dekafix, Terminal marker, 5 x 6 mm, Pitch in mm (P): 6.00
GTIN (EAN)	4008190456603	Weidmueller, To customer specification
Qty.	200 pc(s).	

ADT 4 2C DL

Weidmüller Interface GmbH & Co. KG
Klingenbergstraße 26
D-32758 Detmold
Germany

www.weidmueller.com

Accessories

Type	DEK 5/6 PLUS MC SDR	Version
Order No.	1038650000	Dekafix, Terminal marker, 5 x 6 mm, Pitch in mm (P): 6.00
GTIN (EAN)	4032248767908	Weidmueller, To customer specification
Qty.	200 pc(s).	

Digital current clamp devices

Digital current clamp devices and attachments and adapters are used for measuring AC and DC currents. The significant advantage of these devices is that you can make a measurement without breaking the flow of current.

General ordering data

Type	ZUB MULTIMETER	Version
Order No.	9205270000	Multimeter
GTIN (EAN)	4032248723522	
Qty.	1 pc(s).	

Blank

WS markers are the perfect match for the W-series connectors. Thanks to their system compatibility, the WS tags can also be used with the I-series and the Z-series. The large marking surfaces do not only permit long character strings but also multi-line text.
WS markers are ideal for labels with long, customised character strings. Thanks to the proven MultiCard format, printing with PrintJet CONNECT oder/or Plotter is possible.
- Can be fitted in strips or individually
- Markers in proven MultiCard format

For custom printing: Please send us a file of our labeling software M-Print PRO or M-Print PRO Online (without installation) for your labeling specifications.

General ordering data

Type	WS 10/6 M MC NE WS	Version
Order No.	1818400000	WS, Terminal marker, 10 x 6 mm, Pitch in mm (P): 6.00 Weidmueller,
GTIN (EAN)	4032248310876	Allen-Bradley, white
Qty.	600 pc(s).	
Type	WS 10/6 PLUS MC NE WS	Version
Order No.	1046390000	WS, Terminal marker, 10 x 6 mm, Pitch in mm (P): 6.00 Weidmueller,
GTIN (EAN)	4032248782109	Allen-Bradley, white
Qty.	600 pc(s).	

ADT 4 2C DL

Weidmüller Interface GmbH & Co. KG
Klingenbergstraße 26
D-32758 Detmold
Germany

www.weidmueller.com

Accessories

Type	WS 10/6 M PLUS MC NE WS	Version
Order No.	2003780000	WS, Terminal marker, 10 x 6 mm, Pitch in mm (P): 6.00 Weidmueller,
GTIN (EAN)	4050118424461	Allen-Bradley, white
Qty.	600 pc(s).	
Type	WS 10/6 MC M NE GE	Version
Order No.	1917430000	WS, Terminal marker, 10 x 6 mm, Pitch in mm (P): 6.00 Weidmueller,
GTIN (EAN)	4032248551637	Allen-Bradley, yellow
Qty.	600 pc(s).	
Type	WS 10/6 MC M NE GN	Version
Order No.	1917420000	WS, Terminal marker, 10 x 6 mm, Pitch in mm (P): 6.00 Weidmueller,
GTIN (EAN)	4032248551620	Allen-Bradley, green
Qty.	600 pc(s).	
Type	WS 10/6 MC M NE RT	Version
Order No.	1917440000	WS, Terminal marker, 10 x 6 mm, Pitch in mm (P): 6.00 Weidmueller,
GTIN (EAN)	4032248551644	Allen-Bradley, red
Qty.	600 pc(s).	
Type	WS 10/6 MC M NE BL	Version
Order No.	1069080000	WS, Terminal marker, 10 x 6 mm, Pitch in mm (P): 6.00 Weidmueller,
GTIN (EAN)	4032248824618	Allen-Bradley, blue
Qty.	600 pc(s).	
Type	WS 10/6 MC NE WS	Version
Order No.	1828450000	WS, Terminal marker, 10 x 6 mm, Pitch in mm (P): 6.00 Weidmueller,
GTIN (EAN)	4032248350513	Allen-Bradley, white
Qty.	600 pc(s).	

Component plugs

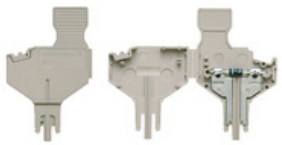

The component plug is used to integrate an electrical component in a disconnect terminal block. After soldering the electronic component, the plug can be integrated into the disconnection area of our disconnect terminal blocks and thus changes the disconnect terminal block into a modular terminal block with integrated electronic component.

General ordering data

Type	BEST	Version
Order No.	1833100000	Accessories, Component plug
GTIN (EAN)	4032248501014	
Qty.	50 pc(s).	
Type	BEST/D	Version
Order No.	1878560000	Accessories, Component plug, 1 A
GTIN (EAN)	4032248471492	
Qty.	50 pc(s).	
Type	BEST/DRBR	Version
Order No.	1878570000	Accessories, Component plug, 22 A
GTIN (EAN)	4032248471508	
Qty.	50 pc(s).	

ADT 4 2C DL

Weidmüller Interface GmbH & Co. KG
Klingenbergstraße 26
D-32758 Detmold
Germany

www.weidmueller.com

Accessories

DEK 5/6

WS/ DEK
MultiMark terminal markers use an innovative composite material made from two components. The hard base contour of the marker snaps securely into the connector. The elastic surface finish makes the marker easy to mount. This specially punched material enables the strips to be stretched to accommodate the slight variations in spacing that tend to add up, especially with long terminal blocks. Another advantage: the excellent printability of the surface material guarantees durable and wear-resistant labelling. A print resolution of 300 dpi also produces a very legible script.
Your benefits with MultiMark

- Firm hold and durable printing
- Continuous strips save installation time
- Easy mounting thanks to an innovative composite material
- Large label field for optimal legibility
- High flexibility thanks to manufacturer independence

General ordering data

Type	DEK 5/6 MM WS	Version
Order No.	2007120000	Dekafix, Terminal marker, 5 x 6 mm, Weidmueller, white
GTIN (EAN)	4050118392104	
Qty.	600 pc(s).	

Disconnect plugs

In contrast to the terminal blocks with integrated disconnect lever, our disconnect plugs can be completely detached or removed from the terminal block and the respective application and offer a flexible alternative solution to our standard disconnectors.

General ordering data

Type	TNST OR	Version
Order No.	2463540000	Disconnect plug (terminal), Wemid, orange
GTIN (EAN)	4050118478211	
Qty.	50 pc(s).	

ADT 4 2C DL

Weidmüller Interface GmbH & Co. KG
Klingenbergstraße 26
D-32758 Detmold
Germany

www.weidmueller.com

Accessories

A-Series

Test adapters and test plugs are used for the electrical connection between terminal blocks and the test equipment. In this way, an electrical contact can be established in the wired state and measurements can be done easily.

General ordering data

Type	ATPG 1.5-10 L	Version
Order No.	1991890000	Test adapter (terminal), 1.5 mm², 250 V, 0.2 A
GTIN (EAN)	4050118376647	
Qty.	50 pc(s).	
Type	ATPG 4 MI-R	Version
Order No.	1991860000	Test adapter (terminal), 1.5 mm², 250 V, 0.2 A
GTIN (EAN)	4050118376661	
Qty.	50 pc(s).	