A2C 2.5 DL

Weidmüller Interface GmbH & Co. KG
Klingenbergstraße 26
D-32758 Detmold
Germany

www.weidmueller.com

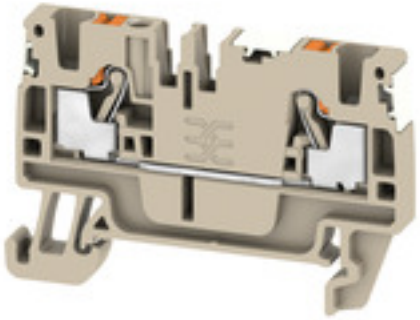

Spring connection with PUSH IN Technology
The innovative PUSH IN technology reduces the amount of time you spend on wiring to a minimum. Direct insertion guarantees high conductor pull-out forces and simple handling for all conductor types.

General ordering data

Version	Feed-through terminal, PUSH IN, 2.5 mm², 800 V, 24 A, dark beige
Order No.	2674690000
Type	A2C 2.5 DL
GTIN (EAN)	4050118779318
Qty.	100 pc(s).

A2C 2.5 DL

Weidmüller Interface GmbH & Co. KG
Klingenbergstraße 26
D-32758 Detmold
Germany

www.weidmueller.com

Technical data

Dimensions and weights

Depth	36.5 mm	Depth (inches)	1.437 inch
Depth including DIN rail	37 mm	Height	55 mm
Height (inches)	2.165 inch	Width	5.1 mm
Width (inches)	0.201 inch	Net weight	6.4 g

Temperatures

Storage temperature	-25 °C...55 °C	Continuous operating temp., min.	-60 °C
Continuous operating temp., max.	130 °C		

Material data

Material	Wemid	Colour	dark beige
UL 94 flammability rating	V-0		

Rating data IECEx/ATEX

Certificate No. (ATEX)	TUEV16ATEX7909U	Certificate No. (IECEX)	IECEXTUR16.0036U
Max. voltage (ATEX)	550 V	Current (ATEX)	20 A
Wire cross section max. (ATEX)	2.5 mm²	Max. voltage (IECEX)	550 V
Current (IECEX)	20 A	Wire cross section max. (IECEX)	2.5 mm²
Marking EN 60079-7	Ex eb II C Gb	Ex 2014/34/EU label	II 2 G D

System specifications

End cover plate required	Yes	Number of potentials	1
Number of levels	1	Number of clamping points per level	2
Number of potentials per tier	1	Levels cross-connected internally	No
PE connection	No	Rail	TS 35
N-function	No	PE function	No
PEN function	No		

Additional technical data

Explosion-tested version	Yes	Open sides	right
Snap-on	No	Type of fixing	Snap-on
With snap-in pegs	No		

Conductors for clamping (additional connection)

Connection type, additional connection	PUSH IN

Conductors for clamping (rated connection)

Blade size	0.6 x 3.5 mm
Clamping range, max.	4 mm²
Clamping range, min.	0.14 mm²
Connection cross-section, stranded, max.	4 mm²
Connection cross-section, stranded, min.	0.5 mm²
Connection direction	top
Gauge to IEC 60947-1	A3
Number of connections	2
Stripping length	10 mm

A2C 2.5 DL

Weidmüller Interface GmbH & Co. KG
Klingenbergstraße 26
D-32758 Detmold
Germany

www.weidmueller.com

Technical data

Tube length for twin wire-end ferrule	Tube length	max.	12 mm
		min.	8 mm
	Cross-section for conductor connection	min.	0.5 mm²
		max.	0.75 mm²
Tube length for wire-end ferrule with plastic collar DIN 46228/4	Cross-section for conductor connection	min.	0.14 mm²
		max.	0.34 mm²
	Tube length	max.	8 mm
		min.	6 mm
	Cross-section for conductor connection	min.	0.5 mm²
		max.	1 mm²
	Tube length	max.	12 mm
		min.	6 mm
	Cross-section for conductor connection	min.	1.5 mm²
		max.	2.5 mm²
	Tube length	max.	12 mm
		min.	8 mm
Tube length for wire-end ferrule without plastic collar DIN 46228/1	Cross-section for conductor connection	nominal	0.25 mm²
	Tube length	nominal	5 mm
	Cross-section for conductor connection	min.	0.5 mm²
		max.	1 mm²
	Tube length	max.	10 mm
		min.	6 mm
	Cross-section for conductor connection	min.	1.5 mm²
		max.	4 mm²
	Tube length	max.	12 mm
		min.	7 mm
Twin wire-end ferrules, max.	0.75 mm²		
Twin wire-end ferrules, min.	0.5 mm²		
Type of connection	PUSH IN		
Wire connection cross section AWG, max.	AWG 12		
Wire connection cross section AWG, min.	AWG 28		
Wire connection cross section, finely stranded, max.	4 mm²		
Wire connection cross section, finely stranded, min.	0.5 mm²		
Wire connection cross-section, finely stranded with wire-end ferrules DIN 46228/1, max.	4 mm²		
Wire connection cross-section, finely stranded with wire-end ferrules DIN 46228/1, min.	0.5 mm²		
Wire connection cross-section, finely stranded with wire-end ferrules DIN 46228/4, max.	2.5 mm²		
Wire connection cross-section, finely stranded with wire-end ferrules DIN 46228/4, min.	0.5 mm²		
Wire connection cross-section, solid core, max.	2.5 mm²		
Wire connection cross-section, solid core, min.	0.5 mm²		

General

Rail	TS 35	Standards	IEC 60947-7-1
Wire connection cross section AWG, max.	AWG 12	Wire connection cross section AWG, min.	AWG 28

A2C 2.5 DL

Weidmüller Interface GmbH & Co. KG
Klingenbergstraße 26
D-32758 Detmold
Germany

www.weidmueller.com

Technical data

Rating data

Rated cross-section	2.5 mm²	Rated voltage	800 V
Rated DC voltage	800 V	Rated current	24 A
Current at maximum wires	24 A	Standards	IEC 60947-7-1
Volume resistance according to IEC 60947-7-x	1.33 mΩ	Rated impulse withstand voltage	8 kV
Power loss in accordance with IEC 60947-7-x	0.77 W	Pollution severity	3
Surge voltage category	III		

Classifications

ETIM 6.0	EC000897	ETIM 7.0	EC000897
ETIM 8.0	EC000897	ETIM 9.0	EC000897
ECLASS 9.0	27-14-11-20	ECLASS 9.1	27-14-11-20
ECLASS 10.0	27-14-11-20	ECLASS 11.0	27-14-11-20
ECLASS 12.0	27-14-11-20	ECLASS 13.0	27-25-01-01

Environmental Product Compliance

REACH SVHC	/

Approvals

Approvals

ROHS	Conform
UL File Number Search	UL Website
Certificate No. (cURusEX)	E184763

Downloads

Approval/Certificate/Document of Conformity	Attestation of Conformity UKCA Ex Attestation of Conformity UKCA Ex Certificate 20-AV4BO-0269U CE Declaration of Conformity UKCA declaration of conformity Confirmation of Standards EN 45545-2_2020-10
Engineering Data	CAD data – STEP
Catalogues	Catalogues in PDF-format

A2C 2.5 DL

Weidmüller Interface GmbH & Co. KG
Klingenbergstraße 26
D-32758 Detmold
Germany

www.weidmueller.com

Drawings

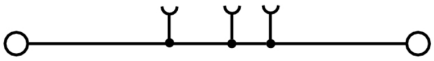

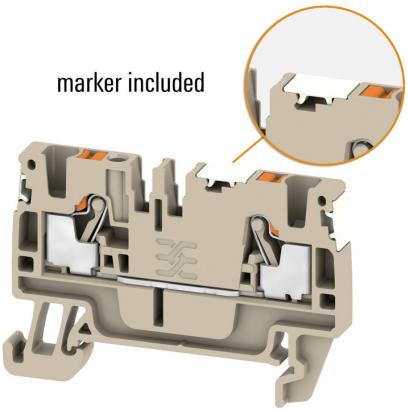

A2C 2.5 DL

Weidmüller Interface GmbH & Co. KG
Klingenbergstraße 26
D-32758 Detmold
Germany

www.weidmueller.com

Accessories

Slotted screwdriver

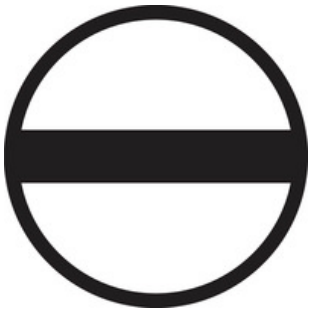

VDE insulated screwdriver sets, for working on live parts up to 1000 V AC and 1500 V DC, DIN EN 60900. IEC 900. Each piece is "GS" safety tested. Blade made from fully hardened, high-alloy chromium-vanadium-molybdenum steel, gun-metal finish.

General ordering data

Type	SDIS SLIM 0.6X3.5X100	Version
Order No.	2749610000	Mounting tool, Blade width (B): 3.5 mm, Blade length: 100 mm, Blade thickness (A): 0.6 mm
GTIN (EAN)	4050118896350	
Qty.	1 pc(s).	

Blank

The Dekafix (DEK) marker is the universal marker for all conductor and plug-in connectors as well as for electronic sub-assemblies. The system is ideal for short number sequences and covers a wide range of ready-printed markers.
Strips for fast installation in only one work step. The printing is easy to read, rich in contrast and available in various widths.

- Large range of ready-to-use markers
- Strips for fast installation
- Terminal markers, suitable for all Weidmüller cable connectors
- Available as blank MultiCard or with standard printing

For custom printing: Please send us a file of our labeling software M-Print PRO or M-Print PRO Online (without installation) for your labeling specifications.

General ordering data

Type	DEK 5/5 MC NE VI	Version
Order No.	1249860000	Dekafix, Terminal marker, 5 x 5 mm, Pitch in mm (P): 5.00
GTIN (EAN)	4050118042764	Weidmueller, violet
Qty.	1,000 pc(s).	
Type	DEK 5/5 MC NE OR	Version
Order No.	1238340000	Dekafix, Terminal marker, 5 x 5 mm, Pitch in mm (P): 5.00
GTIN (EAN)	4050118062632	Weidmueller, orange
Qty.	1,000 pc(s).	
Type	DEK 5/5 MC NE BR	Version
Order No.	1249870000	Dekafix, Terminal marker, 5 x 5 mm, Pitch in mm (P): 5.00
GTIN (EAN)	4050118051865	Weidmueller, brown
Qty.	1,000 pc(s).	

A2C 2.5 DL

Weidmüller Interface GmbH & Co. KG
Klingenbergstraße 26
D-32758 Detmold
Germany

www.weidmueller.com

Accessories

Type	DEK 5/5 MC NE RT	Version
Order No.	1609801686	Dekafix, Terminal marker, 5 x 5 mm, Pitch in mm (P): 5.00
GTIN (EAN)	4008190397128	Weidmueller, red
Qty.	1,000 pc(s).	
Type	DEK 5/5 S MC NE WS	Version
Order No.	1341620000	Dekafix, Terminal marker, 5 x 5 mm, Pitch in mm (P): 5.00
GTIN (EAN)	4050118145793	Weidmueller, white
Qty.	400 pc(s).	
Type	DEK 5/5 MC NE GE	Version
Order No.	1609801687	Dekafix, Terminal marker, 5 x 5 mm, Pitch in mm (P): 5.00
GTIN (EAN)	4008190397135	Weidmueller, yellow
Qty.	1,000 pc(s).	
Type	DEK 5/5 MC NE GR	Version
Order No.	1609801691	Dekafix, Terminal marker, 5 x 5 mm, Pitch in mm (P): 5.00
GTIN (EAN)	4008190397159	Weidmueller, grey
Qty.	1,000 pc(s).	
Type	DEK 5/5 MC NE WS	Version
Order No.	1609801044	Dekafix, Terminal marker, 5 x 5 mm, Pitch in mm (P): 5.00
GTIN (EAN)	4008190397111	Weidmueller, white
Qty.	1,000 pc(s).	
Type	DEK 5/5 MC NE SW	Version
Order No.	1457550000	Dekafix, Terminal marker, 5 x 5 mm, Pitch in mm (P): 5.00
GTIN (EAN)	4050118263817	Weidmueller, black
Qty.	1,000 pc(s).	
Type	DEK 5/5 MC NE BL	Version
Order No.	1609801693	Dekafix, Terminal marker, 5 x 5 mm, Pitch in mm (P): 5.00
GTIN (EAN)	4008190397166	Weidmueller, blue
Qty.	1,000 pc(s).	
Type	DEK 5/5 MC NE GN	Version
Order No.	1609801688	Dekafix, Terminal marker, 5 x 5 mm, Pitch in mm (P): 5.00
GTIN (EAN)	4008190397142	Weidmueller, green
Qty.	1,000 pc(s).	

2.5 mm²

2.5
mm²

End plates are fitted to the open side of the last modular terminal before the end bracket. The use of an end plate ensures the function of the modular terminal and the specified rated voltage. It guarantees protection against contact with live parts and makes the final terminal finger-proof.

General ordering data

Type	AEP 2C 2.5	Version
Order No.	1514400000	A-series, End plate
GTIN (EAN)	4050118436112	
Qty.	50 pc(s).	

A2C 2.5 DL

Weidmüller Interface GmbH & Co. KG
Klingenbergstraße 26
D-32758 Detmold
Germany

www.weidmueller.com

Accessories

Type	AEP 2C 2.5 OR	Version
Order No.	2052290000	A-series, End plate
GTIN (EAN)	4050118411959	
Qty.	50 pc(s).	

Type	AEP 2C 2.5 BL	Version
Order No.	1514420000	A-series, End plate
GTIN (EAN)	4050118436136	
Qty.	50 pc(s).	

Custom printing

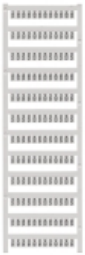

WS markers are the perfect match for the W-series connectors. Thanks to their system compatibility, the WS tags can also be used with the I-series and the Z-series. The large marking surfaces do not only permit long character strings but also multi-line text.
WS markers are ideal for labels with long, customised character strings. Thanks to the proven MultiCard format, printing with PrintJet CONNECT oder/or Plotter is possible.
• Can be fitted in strips or individually
• Markers in proven MultiCard format

For custom printing: Please send us a file of our labeling software M-Print PRO or M-Print PRO Online (without installation) for your labeling specifications.

General ordering data

Type	WS 8/5 MC SDR	Version
Order No.	1640750000	WS, Terminal marker, 8 x 5 mm, Pitch in mm (P): 5.00 Weidmueller,
GTIN (EAN)	4008190456627	Allen-Bradley, To customer specification
Qty.	144 pc(s).	

Type	WS 8/5 PLUS MC SDR	Version
Order No.	1038790000	WS, Terminal marker, 8 x 5 mm, Pitch in mm (P): 5.00 Weidmueller,
GTIN (EAN)	4032248768066	Allen-Bradley, To customer specification
Qty.	120 pc(s).	

A2C 2.5 DL

Weidmüller Interface GmbH & Co. KG
Klingenbergstraße 26
D-32758 Detmold
Germany

www.weidmueller.com

Accessories

WS 8/5

WS/ DEK
MultiMark terminal markers use an innovative composite material made from two components. The hard base contour of the marker snaps securely into the connector. The elastic surface finish makes the marker easy to mount. This specially punched material enables the strips to be stretched to accommodate the slight variations in spacing that tend to add up, especially with long terminal blocks. Another advantage: the excellent printability of the surface material guarantees durable and wear-resistant labelling. A print resolution of 300 dpi also produces a very legible script.
Your benefits with MultiMark

- Firm hold and durable printing
- Continuous strips save installation time
- Easy mounting thanks to an innovative composite material
- Large label field for optimal legibility
- High flexibility thanks to manufacturer independence

General ordering data

Type	WS 8/5 MM WS	Version
Order No.	2007150000	WS, Terminal marker, 8 x 5 mm, Weidmueller, white
GTIN (EAN)	4050118392029	
Qty.	800 pc(s).	

Blank

WS markers are the perfect match for the W-series connectors. Thanks to their system compatibility, the WS tags can also be used with the I-series and the Z-series. The large marking surfaces do not only permit long character strings but also multi-line text.
WS markers are ideal for labels with long, customised character strings. Thanks to the proven MultiCard format, printing with PrintJet CONNECT oder/or Plotter is possible.

- Can be fitted in strips or individually
- Markers in proven MultiCard format

For custom printing: Please send us a file of our labeling software M-Print PRO or M-Print PRO Online (without installation) for your labeling specifications.

General ordering data

Type	WS 8/5 MC NE WS	Version
Order No.	1640740000	WS, Terminal marker, 8 x 5 mm, Pitch in mm (P): 5.00 Weidmueller,
GTIN (EAN)	4008190279103	Allen-Bradley, white
Qty.	720 pc(s).	

A2C 2.5 DL

Weidmüller Interface GmbH & Co. KG
Klingenbergstraße 26
D-32758 Detmold
Germany

www.weidmueller.com

Accessories

Type	WS 8/5 MC NE RT	Version
Order No.	1773521686	WS, Terminal marker, 8 x 5 mm, Pitch in mm (P): 5.00 Weidmueller,
GTIN (EAN)	4032248141531	Allen-Bradley, red
Qty.	720 pc(s).	
Type	WS 8/5 PLUS MC NE WS	Version
Order No.	1951870000	WS, Terminal marker, 8 x 5 mm, Pitch in mm (P): 5.00 Weidmueller,
GTIN (EAN)	4032248631605	Allen-Bradley, white
Qty.	600 pc(s).	
Type	WS 8/5 MC NE GE	Version
Order No.	1773521687	WS, Terminal marker, 8 x 5 mm, Pitch in mm (P): 5.00 Weidmueller,
GTIN (EAN)	4032248141548	Allen-Bradley, yellow
Qty.	720 pc(s).	
Type	WS 8/5 MC NE OR	Version
Order No.	1773521690	WS, Terminal marker, 8 x 5 mm, Pitch in mm (P): 5.00 Weidmueller,
GTIN (EAN)	4032248143092	Allen-Bradley, orange
Qty.	720 pc(s).	
Type	WS 8/5 MC NE BL	Version
Order No.	1773521693	WS, Terminal marker, 8 x 5 mm, Pitch in mm (P): 5.00 Weidmueller,
GTIN (EAN)	4032248141715	Allen-Bradley, blue
Qty.	720 pc(s).	

Z-Series

Weidmüller's range of products includes end brackets that guarantee a permanent, reliable mounting on the terminal rail and prevent sliding. Versions with and without screws are available. The end brackets include marking options, also for group markers, and also a test plug holder.

General ordering data

Type	ZST 1	Version
Order No.	1269070000	Accessories, Accessories holder
GTIN (EAN)	4050118094091	
Qty.	25 pc(s).	
Type	ZST	Version
Order No.	1678680000	Z-series, Accessories holder
GTIN (EAN)	4008190466770	
Qty.	10 pc(s).	

A2C 2.5 DL

Weidmüller Interface GmbH & Co. KG
Klingenbergstraße 26
D-32758 Detmold
Germany

www.weidmueller.com

Accessories

Digital current clamp devices

Digital current clamp devices and attachments and adapters are used for measuring AC and DC currents. The significant advantage of these devices is that you can make a measurement without breaking the flow of current.

General ordering data

Type	ZUB MULTIMETER	Version
Order No.	9205270000	Multimeter
GTIN (EAN)	4032248723522	
Qty.	1 pc(s).	

Custom printing

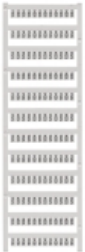

WS markers are the perfect match for the W-series connectors. Thanks to their system compatibility, the WS tags can also be used with the I-series and the Z-series. The large marking surfaces do not only permit long character strings but also multi-line text.
WS markers are ideal for labels with long, customised character strings. Thanks to the proven MultiCard format, printing with PrintJet CONNECT oder/or Plotter is possible.

- Can be fitted in strips or individually
- Markers in proven MultiCard format

For custom printing: Please send us a file of our labeling software M-Print PRO or M-Print PRO Online (without installation) for your labeling specifications.

General ordering data

Type	WS 10/5 M PLUS MC SDR	Version
Order No.	2007770000	WS, Terminal marker, 10 x 5 mm, Pitch in mm (P): 5.00 Weidmueller,
GTIN (EAN)	4050118393279	Allen-Bradley, To customer specification
Qty.	120 pc(s).	
Type	WS 10/5 PLUS MC SDR	Version
Order No.	1046320000	WS, Terminal marker, 10 x 5 mm, Pitch in mm (P): 5.00 Weidmueller,
GTIN (EAN)	4032248782024	Allen-Bradley, To customer specification
Qty.	120 pc(s).	
Type	WS 10/5 MC M SDR	Version
Order No.	1792010000	WS, Terminal marker, 10 x 5 mm, Pitch in mm (P): 5.00 Weidmueller,
GTIN (EAN)	4032248223879	Allen-Bradley, To customer specification
Qty.	144 pc(s).	

A2C 2.5 DL

Weidmüller Interface GmbH & Co. KG
Klingenbergstraße 26
D-32758 Detmold
Germany

www.weidmueller.com

Accessories

Type	WS 10/5 MC SDR	Version
Order No.	1635010000	WS, Terminal marker, 10 x 5 mm, Pitch in mm (P): 5.00 Weidmueller,
GTIN (EAN)	4008190456634	Allen-Bradley, To customer specification
Qty.	144 pc(s).	

Blank

WS markers are the perfect match for the W-series connectors. Thanks to their system compatibility, the WS tags can also be used with the I-series and the Z-series. The large marking surfaces do not only permit long character strings but also multi-line text.
WS markers are ideal for labels with long, customised character strings. Thanks to the proven MultiCard format, printing with PrintJet CONNECT oder/or Plotter is possible.
• Can be fitted in strips or individually
• Markers in proven MultiCard format

For custom printing: Please send us a file of our labeling software M-Print PRO or M-Print PRO Online (without installation) for your labeling specifications.

General ordering data

Type	WS 10/5 PLUS MC NE WS	Version
Order No.	1046380000	WS, Terminal marker, 10 x 5 mm, Pitch in mm (P): 5.00 Weidmueller,
GTIN (EAN)	4032248782086	Allen-Bradley, white
Qty.	600 pc(s).	
Type	WS 10/5 MC NE GE	Version
Order No.	1773531687	WS, Terminal marker, 10 x 5 mm, Pitch in mm (P): 5.00 Weidmueller,
GTIN (EAN)	4032248141753	Allen-Bradley, yellow
Qty.	720 pc(s).	
Type	WS 10/5 MC NE RT	Version
Order No.	1773531686	WS, Terminal marker, 10 x 5 mm, Pitch in mm (P): 5.00 Weidmueller,
GTIN (EAN)	4032248141746	Allen-Bradley, red
Qty.	720 pc(s).	
Type	WS 10/5 MC NE WS	Version
Order No.	1635000000	WS, Terminal marker, 10 x 5 mm, Pitch in mm (P): 5.00 Weidmueller,
GTIN (EAN)	4008190261948	Allen-Bradley, white
Qty.	720 pc(s).	
Type	WS 10/5 M MC NE WS	Version
Order No.	1792000000	WS, Terminal marker, 10 x 5 mm, Pitch in mm (P): 5.00 Weidmueller,
GTIN (EAN)	4032248223862	Allen-Bradley, white
Qty.	720 pc(s).	
Type	WS 10/5 MC NE BL	Version
Order No.	1773531693	WS, Terminal marker, 10 x 5 mm, Pitch in mm (P): 5.00 Weidmueller,
GTIN (EAN)	4032248141814	Allen-Bradley, blue
Qty.	720 pc(s).	

A2C 2.5 DL

Weidmüller Interface GmbH & Co. KG
Klingenbergstraße 26
D-32758 Detmold
Germany

www.weidmueller.com

Accessories

Type	WS 10/5 M PLUS MC NE WS	Version
Order No.	2003770000	WS, Terminal marker, 10 x 5 mm, Pitch in mm (P): 5.00 Weidmueller,
GTIN (EAN)	4050118424447	Allen-Bradley, white
Qty.	600 pc(s).	

2.5 mm²

The plug-in cross-connections feature easy handling and quick installation. This saves a great deal of time during installation in comparison with screwed solutions.

General ordering data

Type	ZQV 2.5N/9	Version
Order No.	1527680000	Cross-connector (terminal), Plugged, Number of poles: 9, Pitch in mm
GTIN (EAN)	4050118447996	(P): 5.10, Insulated: Yes, 24 A, orange
Qty.	20 pc(s).	
Type	ZQV 2.5N/50 RD	Version
Order No.	2109000000	Cross-connector (terminal), Plugged, Number of poles: 50, Pitch in mm
GTIN (EAN)	4050118486001	(P): 5.10, Insulated: Yes, 24 A, red
Qty.	5 pc(s).	
Type	ZQV 2.5N/3 BL	Version
Order No.	1527770000	Cross-connector (terminal), Plugged, Number of poles: 3, Pitch in mm
GTIN (EAN)	4050118448641	(P): 5.10, Insulated: Yes, 24 A, blue
Qty.	60 pc(s).	
Type	ZQV 2.5N/20 BL	Version
Order No.	1527890000	Cross-connector (terminal), Plugged, Number of poles: 20, Pitch in mm
GTIN (EAN)	4050118448566	(P): 5.10, Insulated: Yes, 24 A, blue
Qty.	20 pc(s).	
Type	ZQV 2.5N/5 BL	Version
Order No.	1527790000	Cross-connector (terminal), Plugged, Number of poles: 5, Pitch in mm
GTIN (EAN)	4050118448627	(P): 5.10, Insulated: Yes, 24 A, blue
Qty.	20 pc(s).	
Type	ZQV 2.5N/4 BL	Version
Order No.	1527780000	Cross-connector (terminal), Plugged, Number of poles: 4, Pitch in mm
GTIN (EAN)	4050118448634	(P): 5.10, Insulated: Yes, 24 A, blue
Qty.	60 pc(s).	
Type	ZQV 2.5N/7 BL	Version
Order No.	1527830000	Cross-connector (terminal), Plugged, Number of poles: 7, Pitch in mm
GTIN (EAN)	4050118448603	(P): 5.10, Insulated: Yes, 24 A, blue
Qty.	20 pc(s).	
Type	ZQV 2.5N/5	Version
Order No.	1527620000	Cross-connector (terminal), Plugged, Number of poles: 5, Pitch in mm
GTIN (EAN)	4050118448436	(P): 5.10, Insulated: Yes, 24 A, orange
Qty.	20 pc(s).	

A2C 2.5 DL

Weidmüller Interface GmbH & Co. KG
Klingenbergstraße 26
D-32758 Detmold
Germany

www.weidmueller.com

Accessories

Type	ZQV 2.5N/8 RD	Version
Order No.	2108870000	Cross-connector (terminal), Plugged, Number of poles: 8, Pitch in mm
GTIN (EAN)	4050118448481	(P): 5.10, Insulated: Yes, 24 A, red
Qty.	20 pc(s).	
Type	ZQV 2.5N/10	Version
Order No.	1527690000	Cross-connector (terminal), Plugged, Number of poles: 10, Pitch in mm
GTIN (EAN)	4050118447989	(P): 5.10, Insulated: Yes, 24 A, orange
Qty.	20 pc(s).	
Type	ZQV 2.5N/8 BL	Version
Order No.	1527840000	Cross-connector (terminal), Plugged, Number of poles: 8, Pitch in mm
GTIN (EAN)	4050118448597	(P): 5.10, Insulated: Yes, 24 A, blue
Qty.	20 pc(s).	
Type	ZQV 2.5N/10 BL	Version
Order No.	1527880000	Cross-connector (terminal), Plugged, Number of poles: 10, Pitch in mm
GTIN (EAN)	4050118448573	(P): 5.10, Insulated: Yes, 24 A, blue
Qty.	20 pc(s).	
Type	ZQV 2.5N/50	Version
Order No.	1527730000	Cross-connector (terminal), Plugged, Number of poles: 50, Pitch in mm
GTIN (EAN)	4050118411362	(P): 5.10, Insulated: Yes, 24 A, orange
Qty.	5 pc(s).	
Type	ZQV 2.5N/7 RD	Version
Order No.	2108810000	Cross-connector (terminal), Plugged, Number of poles: 7, Pitch in mm
GTIN (EAN)	4050118448498	(P): 5.10, Insulated: Yes, 24 A, red
Qty.	20 pc(s).	
Type	ZQV 2.5N/9 RD	Version
Order No.	2108900000	Cross-connector (terminal), Plugged, Number of poles: 9, Pitch in mm
GTIN (EAN)	4050118448474	(P): 5.10, Insulated: Yes, 24 A, red
Qty.	20 pc(s).	
Type	ZQV 2.5N/8	Version
Order No.	1527670000	Cross-connector (terminal), Plugged, Number of poles: 8, Pitch in mm
GTIN (EAN)	4050118448405	(P): 5.10, Insulated: Yes, 24 A, orange
Qty.	20 pc(s).	
Type	ZQV 2.5N/3 RD	Version
Order No.	2108690000	Cross-connector (terminal), Plugged, Number of poles: 3, Pitch in mm
GTIN (EAN)	4050118448535	(P): 5.10, Insulated: Yes, 24 A, red
Qty.	60 pc(s).	
Type	ZQV 2.5N/5 RD	Version
Order No.	2108710000	Cross-connector (terminal), Plugged, Number of poles: 5, Pitch in mm
GTIN (EAN)	4050118448511	(P): 5.10, Insulated: Yes, 24 A, red
Qty.	20 pc(s).	
Type	ZQV 2.5N/6 RD	Version
Order No.	2108720000	Cross-connector (terminal), Plugged, Number of poles: 6, Pitch in mm
GTIN (EAN)	4050118448504	(P): 5.10, Insulated: Yes, 24 A, red
Qty.	20 pc(s).	
Type	ZQV 2.5N/50 BL	Version
Order No.	1527920000	Cross-connector (terminal), Plugged, Number of poles: 50, Pitch in mm
GTIN (EAN)	4050118448559	(P): 5.10, Insulated: Yes, 24 A, blue
Qty.	5 pc(s).	
Type	ZQV 2.5N/20	Version
Order No.	1527720000	Cross-connector (terminal), Plugged, Number of poles: 20, Pitch in mm
GTIN (EAN)	4050118447972	(P): 5.10, Insulated: Yes, 24 A, orange
Qty.	20 pc(s).	

A2C 2.5 DL

Weidmüller Interface GmbH & Co. KG
Klingenbergstraße 26
D-32758 Detmold
Germany

www.weidmueller.com

Accessories

Type	ZQV 2.5N/6	Version
Order No.	1527630000	Cross-connector (terminal), Plugged, Number of poles: 6, Pitch in mm
GTIN (EAN)	4050118448429	(P): 5.10, Insulated: Yes, 24 A, orange
Qty.	20 pc(s).	
Type	ZQV 2.5N/2 RD	Version
Order No.	2108470000	Cross-connector (terminal), Plugged, Number of poles: 2, Pitch in mm
GTIN (EAN)	4050118448542	(P): 5.10, Insulated: Yes, 24 A, red
Qty.	60 pc(s).	
Type	ZQV 2.5N/3	Version
Order No.	1527570000	Cross-connector (terminal), Plugged, Number of poles: 3, Pitch in mm
GTIN (EAN)	4050118448450	(P): 5.10, Insulated: Yes, 24 A, orange
Qty.	60 pc(s).	
Type	ZQV 2.5N/2 BL	Version
Order No.	1527740000	Cross-connector (terminal), Plugged, Number of poles: 2, Pitch in mm
GTIN (EAN)	4050118448658	(P): 5.10, Insulated: Yes, 24 A, blue
Qty.	60 pc(s).	
Type	ZQV 2.5N/7	Version
Order No.	1527640000	Cross-connector (terminal), Plugged, Number of poles: 7, Pitch in mm
GTIN (EAN)	4050118448412	(P): 5.10, Insulated: Yes, 24 A, orange
Qty.	20 pc(s).	
Type	ZQV 2.5N/10 RD	Version
Order No.	2108910000	Cross-connector (terminal), Plugged, Number of poles: 10, Pitch in mm
GTIN (EAN)	4050118486018	(P): 5.10, Insulated: Yes, 24 A, red
Qty.	20 pc(s).	
Type	ZQV 2.5N/2	Version
Order No.	1527540000	Cross-connector (terminal), Plugged, Number of poles: 2, Pitch in mm
GTIN (EAN)	4050118448467	(P): 5.10, Insulated: Yes, 24 A, orange
Qty.	60 pc(s).	
Type	ZQV 2.5N/4	Version
Order No.	1527590000	Cross-connector (terminal), Plugged, Number of poles: 4, Pitch in mm
GTIN (EAN)	4050118448443	(P): 5.10, Insulated: Yes, 24 A, orange
Qty.	60 pc(s).	
Type	ZQV 2.5N/4 RD	Version
Order No.	2108700000	Cross-connector (terminal), Plugged, Number of poles: 4, Pitch in mm
GTIN (EAN)	4050118448528	(P): 5.10, Insulated: Yes, 24 A, red
Qty.	60 pc(s).	
Type	ZQV 2.5N/6 BL	Version
Order No.	1527820000	Cross-connector (terminal), Plugged, Number of poles: 6, Pitch in mm
GTIN (EAN)	4050118448610	(P): 5.10, Insulated: Yes, 24 A, blue
Qty.	20 pc(s).	
Type	ZQV 2.5N/20 RD	Version
Order No.	2108920000	Cross-connector (terminal), Plugged, Number of poles: 20, Pitch in mm
GTIN (EAN)	4050118485899	(P): 5.10, Insulated: Yes, 24 A, red
Qty.	20 pc(s).	
Type	ZQV 2.5N/9 BL	Version
Order No.	1527870000	Cross-connector (terminal), Plugged, Number of poles: 9, Pitch in mm
GTIN (EAN)	4050118448580	(P): 5.10, Insulated: Yes, 24 A, blue
Qty.	20 pc(s).	

A2C 2.5 DL

Weidmüller Interface GmbH & Co. KG
Klingenbergstraße 26
D-32758 Detmold
Germany

www.weidmueller.com

Accessories

DEK 5/5

WS/ DEK
MultiMark terminal markers use an innovative composite material made from two components. The hard base contour of the marker snaps securely into the connector. The elastic surface finish makes the marker easy to mount. This specially punched material enables the strips to be stretched to accommodate the slight variations in spacing that tend to add up, especially with long terminal blocks. Another advantage: the excellent printability of the surface material guarantees durable and wear-resistant labelling. A print resolution of 300 dpi also produces a very legible script.
Your benefits with MultiMark

- Firm hold and durable printing
- Continuous strips save installation time
- Easy mounting thanks to an innovative composite material
- Large label field for optimal legibility
- High flexibility thanks to manufacturer independence

General ordering data

Type	DEK 5/5 MM WS	Version
Order No.	2007110000	Dekafix, Terminal marker, 5 x 5 mm, Weidmueller, white
GTIN (EAN)	4050118391862	
Qty.	800 pc(s).	

A2C 2.5 DL

Weidmüller Interface GmbH & Co. KG
Klingenbergstraße 26
D-32758 Detmold
Germany

www.weidmueller.com

Accessories

Custom printing

The Dekafix (DEK) marker is the universal marker for all conductor and plug-in connectors as well as for electronic sub-assemblies. The system is ideal for short number sequences and covers a wide range of ready-printed markers.
Strips for fast installation in only one work step. The printing is easy to read, rich in contrast and available in various widths.

- Large range of ready-to-use markers
- Strips for fast installation
- Terminal markers, suitable for all Weidmüller cable connectors
- Available as blank MultiCard or with standard printing

For custom printing: Please send us a file of our labeling software M-Print PRO or M-Print PRO Online (without installation) for your labeling specifications.

General ordering data

Type	DEK 5/5 S MC SDR	Version
Order No.	1341590000	Dekafix, Terminal marker, 5 x 5 mm, Pitch in mm (P): 5.00
GTIN (EAN)	4050118146042	Weidmueller, To customer specification
Qty.	80 pc(s).	
Type	DEK 5/5 MC SDR	Version
Order No.	1609810000	Dekafix, Terminal marker, 5 x 5 mm, Pitch in mm (P): 5.00
GTIN (EAN)	4008190456597	Weidmueller, To customer specification
Qty.	200 pc(s).	
Type	DEK 5/5 PLUS MC SDR	Version
Order No.	1854500000	Dekafix, Terminal marker, 5 x 5 mm, Pitch in mm (P): 5.00
GTIN (EAN)	4032248393602	Weidmueller, To customer specification
Qty.	200 pc(s).	

A2C 2.5 DL

Weidmüller Interface GmbH & Co. KG
Klingenbergstraße 26
D-32758 Detmold
Germany

www.weidmueller.com

Accessories

Plus

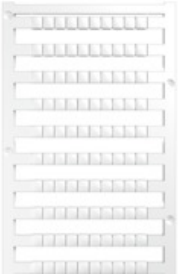

The Dekafix (DEK) marker is the universal marker for all conductor and plug-in connectors as well as for electronic sub-assemblies. The system is ideal for short number sequences and covers a wide range of ready-printed markers.
Strips for fast installation in only one work step. The printing is easy to read, rich in contrast and available in various widths.

- Large range of ready-to-use markers
- Strips for fast installation
- Terminal markers, suitable for all Weidmüller cable connectors
- Available as blank MultiCard or with standard printing

For custom printing: Please send us a file of our labeling software M-Print PRO or M-Print PRO Online (without installation) for your labeling specifications.

General ordering data

Type	DEK 5/5 PLUS MC NE GE	Version
Order No.	1907520000	Dekafix, Terminal marker, 5 x 5 mm, Pitch in mm (P): 5.00
GTIN (EAN)	4032248532100	Weidmueller, yellow
Qty.	1,000 pc(s).	
Type	DEK 5/5 PLUS MC NE WS	Version
Order No.	1854490000	Dekafix, Terminal marker, 5 x 5 mm, Pitch in mm (P): 5.00
GTIN (EAN)	4032248393596	Weidmueller, white
Qty.	1,000 pc(s).	

A-Series

A partition plate is used for the optical separation of circuits or used for electrical isolation from neighbouring cross-connectors. In contrast to the end plate, the contour can be larger than the adjacent terminal blocks. However, it should not be smaller, as otherwise the required clearance and creepage distances within the application can no longer be maintained.

General ordering data

Type	APP 1	Version
Order No.	2488970000	A-series, Partition plate
GTIN (EAN)	4050118499216	
Qty.	50 pc(s).	

A2C 2.5 DL

Weidmüller Interface GmbH & Co. KG
Klingenbergstraße 26
D-32758 Detmold
Germany

www.weidmueller.com

Accessories

A-Series

Weidmüller's range of products includes end brackets that guarantee a permanent, reliable mounting on the terminal rail and prevent sliding. Versions with and without screws are available. The end brackets include marking options, also for group markers, and also a test plug holder.

General ordering data

Type	AEB 35 SCL/1 V0	Version
Order No.	2661280000	A-series, End bracket
GTIN (EAN)	4050118702163	
Qty.	20 pc(s).	
Type	AEB 35 SCL/1 V0 GY	Version
Order No.	2661290000	A-series, End bracket
GTIN (EAN)	4050118702170	
Qty.	20 pc(s).	
Type	AEB 35 SC/1	Version
Order No.	1991920000	A-series, End bracket
GTIN (EAN)	4050118376722	
Qty.	50 pc(s).	
Type	AEB 35 SC/1 BK	Version
Order No.	2475310000	A-series, End bracket
GTIN (EAN)	4050118487114	
Qty.	50 pc(s).	
Type	AEB 35 SCL/1 V0 BK	Version
Order No.	2661300000	A-series, End bracket
GTIN (EAN)	4050118702187	
Qty.	20 pc(s).	

A2C 2.5 DL

Weidmüller Interface GmbH & Co. KG
Klingenbergstraße 26
D-32758 Detmold
Germany

www.weidmueller.com

Accessories

V0

The Dekafix (DEK) marker is the universal marker for all conductor and plug-in connectors as well as for electronic sub-assemblies. The system is ideal for short number sequences and covers a wide range of ready-printed markers.
Strips for fast installation in only one work step. The printing is easy to read, rich in contrast and available in various widths.

- Large range of ready-to-use markers
- Strips for fast installation
- Terminal markers, suitable for all Weidmüller cable connectors
- Available as blank MultiCard or with standard printing

For custom printing: Please send us a file of our labeling software M-Print PRO or M-Print PRO Online (without installation) for your labeling specifications.

General ordering data

Type	DEK 5/5 MC NE V0 WS	Version
Order No.	1388530000	Dekafix, Terminal marker, 5 x 5 mm, Pitch in mm (P): 5.00
GTIN (EAN)	4050118188622	Weidmueller, white
Qty.	1,000 pc(s).	

Marker holder

The marker holder offer the possibility of additional mounting of standard markers with a pitch of 5 or 5.1 mm. The angled holders can be optionally snaped together and could be mounted in all standard marking channels of the Klippon® Connect modular terminal blocks. Fitting marker types could be found under the respective accessories of the designation marking holder.

General ordering data

Type	BZT 1 WS 10/5	Version
Order No.	1805490000	Accessories, Marker holder
GTIN (EAN)	4032248270231	
Qty.	100 pc(s).	
Type	BZT 1 ZA WS 10/5	Version
Order No.	1805520000	Accessories, Marker holder
GTIN (EAN)	4032248270248	
Qty.	100 pc(s).	

A2C 2.5 DL

Weidmüller Interface GmbH & Co. KG
Klingenbergstraße 26
D-32758 Detmold
Germany

www.weidmueller.com

Accessories

A-Series

Test adapters and test plugs are used for the electrical connection between terminal blocks and the test equipment. In this way, an electrical contact can be established in the wired state and measurements can be done easily.

General ordering data

Type	ATPG 1.5-10 L	Version
Order No.	1991890000	Test adapter (terminal), 1.5 mm², 250 V, 0.2 A
GTIN (EAN)	4050118376647	
Qty.	50 pc(s).	
Type	ATPG 2.5 MI-R	Version
Order No.	1991960000	Test adapter (terminal), 1.5 mm², 250 V, 0.2 A
GTIN (EAN)	4050118376685	
Qty.	50 pc(s).	
Type	ATPG 2.5/5	Version
Order No.	2041180000	Test adapter (terminal), 1.5 mm², 250 V, 0.2 A
GTIN (EAN)	4050118409505	
Qty.	25 pc(s).	
Type	ATPG 2.5/3	Version
Order No.	2041190000	Test adapter (terminal), 1.5 mm², 250 V, 0.2 A
GTIN (EAN)	4050118409604	
Qty.	25 pc(s).	

A-Series

Warning covers with a flash symbol provide more safety for man and machine. They are used where external voltage must be indicated within the application.

General ordering data

Type	AAM 2.5 YE FLASH	Version
Order No.	2635550000	Terminal marker, 8 x 5.1 mm, Pitch in mm (P): 5.00 yellow
GTIN (EAN)	4050118674095	
Qty.	40 pc(s).	