A4C 1.5 DL

Weidmüller Interface GmbH & Co. KG
Klingenbergstraße 26
D-32758 Detmold
Germany

www.weidmueller.com

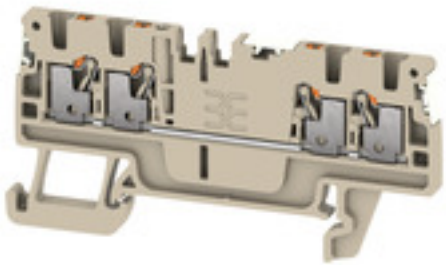

Spring connection with PUSH IN Technology
The innovative PUSH IN technology reduces the amount of time you spend on wiring to a minimum. Direct insertion guarantees high conductor pull-out forces and simple handling for all conductor types.

General ordering data

Version	Feed-through terminal, PUSH IN, 1.5 mm², 500 V, 17.5 A, dark beige
Order No.	2674660000
Type	A4C 1.5 DL
GTIN (EAN)	4050118716108
Qty.	100 pc(s).

A4C 1.5 DL

Weidmüller Interface GmbH & Co. KG
Klingenbergstraße 26
D-32758 Detmold
Germany

www.weidmueller.com

Technical data

Dimensions and weights

Depth	33.5 mm	Depth (inches)	1.319 inch
Depth including DIN rail	34 mm	Height	67.5 mm
Height (inches)	2.657 inch	Width	3.5 mm
Width (inches)	0.138 inch	Net weight	5.92 g

Temperatures

Storage temperature	-25 °C...55 °C	Continuous operating temp., min.	-60 °C
Continuous operating temp., max.	130 °C		

Material data

Material	Wemid	Colour	dark beige
UL 94 flammability rating	V-0		

Rating data IECEx/ATEX

Certificate No. (ATEX)	TUEV16ATEX7909U	Certificate No. (IECEX)	IECEXTUR16.0036U
Max. voltage (ATEX)	440 V	Current (ATEX)	15 A
Wire cross section max. (ATEX)	1.5 mm²	Max. voltage (IECEX)	440 V
Current (IECEX)	15 A	Wire cross section max. (IECEX)	1.5 mm²

System specifications

End cover plate required	Yes	Number of potentials	1
Number of levels	1	Number of potentials per tier	1
Levels cross-connected internally	No	Rail	TS 35

Additional technical data

Explosion-tested version	Yes	Open sides	right

Conductors for clamping (additional connection)

Connection type, additional connection	PUSH IN

Conductors for clamping (rated connection)

Blade size	0.4 x 2.0 mm		
Clamping range, max.	1.5 mm²		
Clamping range, min.	0.14 mm²		
Connection cross-section, stranded, max.	1.5 mm²		
Connection cross-section, stranded, min.	0.5 mm²		
Gauge to IEC 60947-1	A1		
Number of connections	4		
Stripping length	8 mm		
Tube length for wire-end ferrule with plastic collar DIN 46228/4	Cross-section for conductor connection	min.	0.14 mm²
		max.	0.75 mm²
	Tube length	max.	8 mm
		min.	6 mm

A4C 1.5 DL

Weidmüller Interface GmbH & Co. KG
Klingenbergstraße 26
D-32758 Detmold
Germany

www.weidmueller.com

Technical data

Tube length for wire-end ferrule without plastic collar DIN 46228/1	Cross-section for conductor connection	nominal	0.25 mm²
	Tube length	min.	5 mm
	Cross-section for conductor connection	min.	0.5 mm²
		max.	1 mm²
	Tube length	nominal	6 mm
	Cross-section for conductor connection	nominal	1.5 mm²
	Tube length	nominal	10 mm
Type of connection	PUSH IN		
Wire connection cross section AWG, max.	AWG 14		
Wire connection cross section AWG, min.	AWG 26		
Wire connection cross section, finely stranded, max.	1.5 mm²		
Wire connection cross section, finely stranded, min.	0.5 mm²		
Wire connection cross-section, finely stranded with wire-end ferrules DIN 46228/1, max.	1.5 mm²		
Wire connection cross-section, finely stranded with wire-end ferrules DIN 46228/1, min.	0.5 mm²		
Wire connection cross-section, finely stranded with wire-end ferrules DIN 46228/4, max.	1 mm²		
Wire connection cross-section, finely stranded with wire-end ferrules DIN 46228/4, min.	0.5 mm²		
Wire connection cross-section, solid core, max.	1.5 mm²		
Wire connection cross-section, solid core, min.	0.5 mm²		

General

Rail	TS 35	Standards	IEC 60947-7-1
Wire connection cross section AWG, max.	AWG 14	Wire connection cross section AWG, min.	AWG 26

Rating data

Rated cross-section	1.5 mm²	Rated voltage	500 V
Rated DC voltage	500 V	Rated current	17.5 A
Current at maximum wires	17.5 A	Standards	IEC 60947-7-1
Volume resistance according to IEC 60947-7-x	1.83 mΩ	Rated impulse withstand voltage	6 kV
Power loss in accordance with IEC 60947-7-x	0.56 W	Pollution severity	3
Surge voltage category	III		

UL rating data

Certificate No. (cURus)	E60693	Conductor size Factory wiring max. (cURus)	14 AWG
Conductor size Factory wiring min. (cURus)	26 AWG	Conductor size Field wiring max. (cURus)	14 AWG
Conductor size Field wiring min. (cURus)	26 AWG	Current size B (cURus)	13 A
Current size C (cURus)	13 A	Current size D (cURus)	5 A
Voltage size B (cURus)	300 V	Voltage size C (cURus)	300 V
Voltage size D (cURus)	600 V		

A4C 1.5 DL

Weidmüller Interface GmbH & Co. KG
Klingenbergstraße 26
D-32758 Detmold
Germany

www.weidmueller.com

Technical data

Classifications

ETIM 6.0	EC000897	ETIM 7.0	EC000897
ETIM 8.0	EC000897	ETIM 9.0	EC000897
ECLASS 9.0	27-14-11-20	ECLASS 9.1	27-14-11-20
ECLASS 10.0	27-14-11-20	ECLASS 11.0	27-14-11-20
ECLASS 12.0	27-14-11-20	ECLASS 13.0	27-25-01-01
ECLASS 14.0	27-25-01-01		

Environmental Product Compliance

REACH SVHC	/
RoHS Compliance Status	Compliant without exemption

Approvals

Approvals	
ROHS	Conform
UL File Number Search	UL Website
Certificate No. (cURus)	E60693
Certificate No. (cURusEX)	E184763

Downloads

Approval/Certificate/Document of Conformity	Attestation of Conformity UKCA Ex Attestation of Conformity UKCA Ex Certificate 20-AV4BO-0269U CE Declaration of Conformity UKCA declaration of conformity Confirmation of Standards EN 45545-2_2020-10
Engineering Data	CAD data – STEP
Catalogues	Catalogues in PDF-format

A4C 1.5 DL

Weidmüller Interface GmbH & Co. KG
Klingenbergstraße 26
D-32758 Detmold
Germany

www.weidmueller.com

Drawings

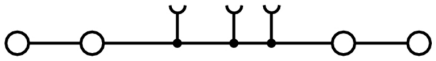

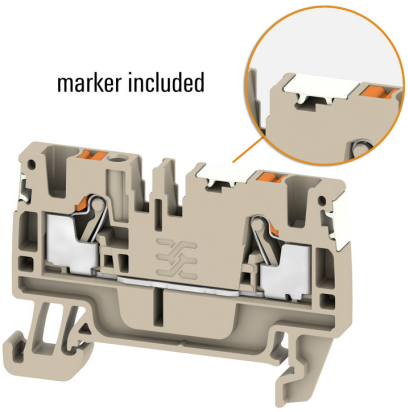

A4C 1.5 DL

Weidmüller Interface GmbH & Co. KG
Klingenbergstraße 26
D-32758 Detmold
Germany

www.weidmueller.com

Accessories

DEK 5/3.5

WS/ DEK
MultiMark terminal markers use an innovative composite material made from two components. The hard base contour of the marker snaps securely into the connector. The elastic surface finish makes the marker easy to mount. This specially punched material enables the strips to be stretched to accommodate the slight variations in spacing that tend to add up, especially with long terminal blocks. Another advantage: the excellent printability of the surface material guarantees durable and wear-resistant labelling. A print resolution of 300 dpi also produces a very legible script.
Your benefits with MultiMark

- Firm hold and durable printing
- Continuous strips save installation time
- Easy mounting thanks to an innovative composite material
- Large label field for optimal legibility
- High flexibility thanks to manufacturer independence

General ordering data

Type	DEK 5/3.5 MM WS	Version
Order No.	2007100000	Dekafix, Terminal marker, 5 x 3.5 mm, Weidmueller, white
GTIN (EAN)	4050118391992	
Qty.	1,000 pc(s).	

1.5 mm²

End plates are fitted to the open side of the last modular terminal before the end bracket. The use of an end plate ensures the function of the modular terminal and the specified rated voltage. It guarantees protection against contact with live parts and makes the final terminal finger-proof.

General ordering data

Type	AEP 4C 1.5	Version
Order No.	1552640000	A-series, End plate
GTIN (EAN)	4050118359817	
Qty.	50 pc(s).	
Type	AEP 4C 1.5 BL	Version
Order No.	1552650000	A-series, End plate
GTIN (EAN)	4050118359619	
Qty.	50 pc(s).	

A4C 1.5 DL

Weidmüller Interface GmbH & Co. KG
Klingenbergstraße 26
D-32758 Detmold
Germany

www.weidmueller.com

Accessories

Type	AEP 4C 1.5 OR	Version
Order No.	2052400000	A-series, End plate
GTIN (EAN)	4050118412048	
Qty.	50 pc(s).	

A-Series

Warning covers with a flash symbol provide more safety for man and machine. They are used where external voltage must be indicated within the application.

General ordering data

Type	AAM 1.5 YE FLASH	Version
Order No.	2635520000	Terminal marker, 6.2 x 3.5 mm, Pitch in mm (P): 3.50 yellow
GTIN (EAN)	4050118674088	
Qty.	40 pc(s).	

A-Series

A partition plate is used for the optical separation of circuits or used for electrical isolation from neighbouring cross-connectors. In contrast to the end plate, the contour can be larger than the adjacent terminal blocks. However, it should not be smaller, as otherwise the required clearance and creepage distances within the application can no longer be maintained.

General ordering data

Type	APP 2	Version
Order No.	2489090000	A-series, Partition plate
GTIN (EAN)	4050118499308	
Qty.	50 pc(s).	

A4C 1.5 DL

Weidmüller Interface GmbH & Co. KG
Klingenbergstraße 26
D-32758 Detmold
Germany

www.weidmueller.com

Accessories

A-Series

Test adapters and test plugs are used for the electrical connection between terminal blocks and the test equipment. In this way, an electrical contact can be established in the wired state and measurements can be done easily.

General ordering data

Type	ATPG 1.5 MI-R	Version
Order No.	1991880000	Test adapter (terminal), 1.5 mm², 250 V, 0.2 A
GTIN (EAN)	4050118376715	
Qty.	50 pc(s).	
Type	ATPG 1.5-10 L	Version
Order No.	1991890000	Test adapter (terminal), 1.5 mm², 250 V, 0.2 A
GTIN (EAN)	4050118376647	
Qty.	50 pc(s).	

Digital multimeters

Multimeters are capable of measuring a number of variables. Each instrument can measure voltage and resistance, as well as performing continuity and diode testing as standard.
In addition, the individual multimeters also feature extra measuring options such as current, frequency, capacitance and temperature. Digital multimeters have the advantage of a clear display which can be read easily and directly. With these instruments, mistakes arising from faulty conversion of the measuring ranges or misreading the display are a thing of the past.

General ordering data

Type	ZUB MULTIMETER	Version
Order No.	9205270000	Multimeter
GTIN (EAN)	4032248723522	
Qty.	1 pc(s).	

A4C 1.5 DL

Weidmüller Interface GmbH & Co. KG
Klingenbergstraße 26
D-32758 Detmold
Germany

www.weidmueller.com

Accessories

Slotted screwdriver

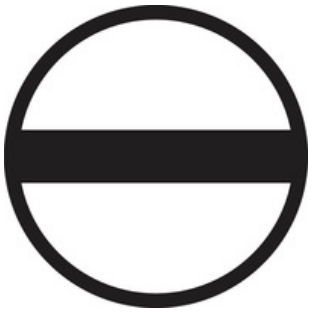

Slotted screwdriver with rounded blade SD DIN 5265, ISO 2380/2, output to DIN 5264, ISO 2380/1. ChromTop tip, SoftFinish grip

General ordering data

Type	SDS 0.4X2.0X60	Version
Order No.	2749260000	Screwdriver, Blade width (B): 2 mm, Blade length: 60 mm, Blade
GTIN (EAN)	4050118895537	thickness (A): 0.4 mm
Qty.	1 pc(s).	

Custom printing

The Dekafix (DEK) marker is the universal marker for all conductor and plug-in connectors as well as for electronic sub-assemblies. The system is ideal for short number sequences and covers a wide range of ready-printed markers.
Strips for fast installation in only one work step. The printing is easy to read, rich in contrast and available in various widths.

- Large range of ready-to-use markers
- Strips for fast installation
- Terminal markers, suitable for all Weidmüller cable connectors
- Available as blank MultiCard or with standard printing

For custom printing: Please send us a file of our labeling software M-Print PRO or M-Print PRO Online (without installation) for your labeling specifications.

General ordering data

Type	DEK 5/3.5 MC SDR	Version
Order No.	1767730000	Dekafix, Terminal marker, 5 x 3.5 mm, Pitch in mm (P): 3.50
GTIN (EAN)	4032248102532	Weidmueller, To customer specification
Qty.	100 pc(s).	
Type	DEK 5/3.5 PLUS MC SDR	Version
Order No.	2007790000	Dekafix, Terminal marker, 5 x 3.5 mm, Pitch in mm (P): 3.50
GTIN (EAN)	4050118393347	Weidmueller, To customer specification
Qty.	320 pc(s).	

A4C 1.5 DL

Weidmüller Interface GmbH & Co. KG
Klingenbergstraße 26
D-32758 Detmold
Germany

www.weidmueller.com

Accessories

WS 8/3.5

WS/ DEK
MultiMark terminal markers use an innovative composite material made from two components. The hard base contour of the marker snaps securely into the connector. The elastic surface finish makes the marker easy to mount. This specially punched material enables the strips to be stretched to accommodate the slight variations in spacing that tend to add up, especially with long terminal blocks. Another advantage: the excellent printability of the surface material guarantees durable and wear-resistant labelling. A print resolution of 300 dpi also produces a very legible script.
Your benefits with MultiMark

- Firm hold and durable printing
- Continuous strips save installation time
- Easy mounting thanks to an innovative composite material
- Large label field for optimal legibility
- High flexibility thanks to manufacturer independence

General ordering data

Type	WS 8/3.5 MM WS	Version
Order No.	2007140000	WS, Terminal marker, 8 x 3.5 mm, Weidmueller, white
GTIN (EAN)	4050118391893	
Qty.	1,000 pc(s).	

Blank

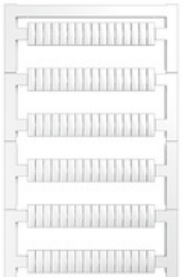

WS markers are the perfect match for the W-series connectors. Thanks to their system compatibility, the WS tags can also be used with the I-series and the Z-series. The large marking surfaces do not only permit long character strings but also multi-line text.
WS markers are ideal for labels with long, customised character strings. Thanks to the proven MultiCard format, printing with PrintJet CONNECT oder/or Plotter is possible.

- Can be fitted in strips or individually
- Markers in proven MultiCard format

For custom printing: Please send us a file of our labeling software M-Print PRO or M-Print PRO Online (without installation) for your labeling specifications.

General ordering data

Type	WS 10/3.5 PLUS MC NE WS	Version
Order No.	2003760000	WS, Terminal marker, 10 x 3.5 mm, Pitch in mm (P): 3.50
GTIN (EAN)	4050118424454	Weidmueller, white
Qty.	960 pc(s).	

A4C 1.5 DL

Weidmüller Interface GmbH & Co. KG
Klingenbergstraße 26
D-32758 Detmold
Germany

www.weidmueller.com

Accessories

Blank

The Dekafix (DEK) marker is the universal marker for all conductor and plug-in connectors as well as for electronic sub-assemblies. The system is ideal for short number sequences and covers a wide range of ready-printed markers.
Strips for fast installation in only one work step. The printing is easy to read, rich in contrast and available in various widths.

- Large range of ready-to-use markers
- Strips for fast installation
- Terminal markers, suitable for all Weidmüller cable connectors
- Available as blank MultiCard or with standard printing

For custom printing: Please send us a file of our labeling software M-Print PRO or M-Print PRO Online (without installation) for your labeling specifications.

General ordering data

Type	DEK 5/3.5 MC NE WS	Version
Order No.	1755270000	Dekafix, Terminal marker, 5 x 3.5 mm, Pitch in mm (P): 3.50
GTIN (EAN)	4032248017348	Weidmueller, white
Qty.	500 pc(s).	
Type	DEK 5/3.5 MC NE GE	Version
Order No.	1369480000	Dekafix, Terminal marker, 5 x 3.5 mm, Pitch in mm (P): 3.50
GTIN (EAN)	4050118171860	Weidmueller, yellow
Qty.	500 pc(s).	
Type	DEK 5/3.5 PLUS MC NE WS	Version
Order No.	2003750000	Dekafix, Terminal marker, 5 x 3.5 mm, Pitch in mm (P): 3.50
GTIN (EAN)	4050118424430	Weidmueller, white
Qty.	1,600 pc(s).	

1.5 mm²

The plug-in cross-connections feature easy handling and quick installation. This saves a great deal of time during installation in comparison with screwed solutions.

General ordering data

Type	ZQV 1.5N/3 RD	Version
Order No.	1985670000	Cross-connector (terminal), Plugged, red, 17.5 A, Number of poles: 3,
GTIN (EAN)	4050118370348	Pitch in mm (P): 3.50, Insulated: Yes, Width: 9 mm
Qty.	60 pc(s).	

A4C 1.5 DL

Weidmüller Interface GmbH & Co. KG
Klingenbergstraße 26
D-32758 Detmold
Germany

www.weidmueller.com

Accessories

Type	ZQV 1.5N/7 BL	Version
Order No.	1985630000	Cross-connector (terminal), Plugged, blue, 17.5 A, Number of poles: 7,
GTIN (EAN)	4050118370522	Pitch in mm (P): 3.50, Insulated: Yes, Width: 23 mm
Qty.	20 pc(s).	
Type	ZQV 1.5N/8 BL	Version
Order No.	1985640000	Cross-connector (terminal), Plugged, blue, 17.5 A, Number of poles: 8,
GTIN (EAN)	4050118370461	Pitch in mm (P): 3.50, Insulated: Yes, Width: 26.5 mm
Qty.	20 pc(s).	
Type	ZQV 1.5N/4 BL	Version
Order No.	1985570000	Cross-connector (terminal), Plugged, blue, 17.5 A, Number of poles: 4,
GTIN (EAN)	4050118370317	Pitch in mm (P): 3.50, Insulated: Yes, Width: 12.5 mm
Qty.	60 pc(s).	
Type	ZQV 1.5N/9 BL	Version
Order No.	1985660000	Cross-connector (terminal), Plugged, blue, 17.5 A, Number of poles: 9,
GTIN (EAN)	4050118370478	Pitch in mm (P): 3.50, Insulated: Yes, Width: 30 mm
Qty.	20 pc(s).	
Type	ZQV 1.5N/5 BL	Version
Order No.	1985590000	Cross-connector (terminal), Plugged, blue, 17.5 A, Number of poles: 5,
GTIN (EAN)	4050118370430	Pitch in mm (P): 3.50, Insulated: Yes, Width: 16 mm
Qty.	20 pc(s).	
Type	ZQV 1.5N/5	Version
Order No.	1985500000	Cross-connector (terminal), Plugged, orange, 17.5 A, Number of poles:
GTIN (EAN)	4050118369991	5, Pitch in mm (P): 3.50, Insulated: Yes, Width: 16 mm
Qty.	20 pc(s).	
Type	ZQV 1.5N/6	Version
Order No.	1985510000	Cross-connector (terminal), Plugged, orange, 17.5 A, Number of poles:
GTIN (EAN)	4050118370188	6, Pitch in mm (P): 3.50, Insulated: Yes, Width: 19.5 mm
Qty.	20 pc(s).	
Type	ZQV 1.5N/20 RD	Version
Order No.	1985810000	Cross-connector (terminal), Plugged, red, 17.5 A, Number of poles: 20,
GTIN (EAN)	4050118370355	Pitch in mm (P): 3.50, Insulated: Yes, Width: 70 mm
Qty.	20 pc(s).	
Type	ZQV 1.5N/50 BL	Version
Order No.	1985720000	Cross-connector (terminal), Plugged, blue, 17.5 A, Number of poles:
GTIN (EAN)	4050118370546	50, Pitch in mm (P): 3.50, Insulated: Yes, Width: 175 mm
Qty.	5 pc(s).	
Type	ZQV 1.5N/10 BL	Version
Order No.	1985680000	Cross-connector (terminal), Plugged, blue, 17.5 A, Number of poles:
GTIN (EAN)	4050118370539	10, Pitch in mm (P): 3.50, Insulated: Yes, Width: 33.5 mm
Qty.	20 pc(s).	
Type	ZQV 1.5N/7	Version
Order No.	1985520000	Cross-connector (terminal), Plugged, orange, 17.5 A, Number of poles:
GTIN (EAN)	4050118370195	7, Pitch in mm (P): 3.50, Insulated: Yes, Width: 23 mm
Qty.	20 pc(s).	
Type	ZQV 1.5N/3	Version
Order No.	1985480000	Cross-connector (terminal), Plugged, orange, 17.5 A, Number of poles:
GTIN (EAN)	4050118370096	3, Pitch in mm (P): 3.50, Insulated: Yes, Width: 9 mm
Qty.	60 pc(s).	
Type	ZQV 1.5N/50 RD	Version
Order No.	1985820000	Cross-connector (terminal), Plugged, red, 17.5 A, Number of poles: 50,
GTIN (EAN)	4050118370270	Pitch in mm (P): 3.50, Insulated: Yes, Width: 175 mm
Qty.	5 pc(s).	

A4C 1.5 DL

Weidmüller Interface GmbH & Co. KG
Klingenbergstraße 26
D-32758 Detmold
Germany

www.weidmueller.com

Accessories

Type	ZQV 1.5N/4 RD	Version
Order No.	1985690000	Cross-connector (terminal), Plugged, red, 17.5 A, Number of poles: 4,
GTIN (EAN)	4050118370515	Pitch in mm (P): 3.50, Insulated: Yes, Width: 12.5 mm
Qty.	60 pc(s).	
Type	ZQV 1.5N/8	Version
Order No.	1985540000	Cross-connector (terminal), Plugged, orange, 17.5 A, Number of poles:
GTIN (EAN)	4050118370218	8, Pitch in mm (P): 3.50, Insulated: Yes, Width: 26.5 mm
Qty.	20 pc(s).	
Type	ZQV 1.5N/9 RD	Version
Order No.	1985790000	Cross-connector (terminal), Plugged, red, 17.5 A, Number of poles: 9,
GTIN (EAN)	4050118370386	Pitch in mm (P): 3.50, Insulated: Yes, Width: 30 mm
Qty.	20 pc(s).	
Type	ZQV 1.5N/2	Version
Order No.	1985410000	Cross-connector (terminal), Plugged, orange, 17.5 A, Number of poles:
GTIN (EAN)	4050118369861	2, Pitch in mm (P): 3.50, Insulated: Yes, Width: 5.5 mm
Qty.	60 pc(s).	
Type	ZQV 1.5N/4	Version
Order No.	1985490000	Cross-connector (terminal), Plugged, orange, 17.5 A, Number of poles:
GTIN (EAN)	4050118370201	4, Pitch in mm (P): 3.50, Insulated: Yes, Width: 12.5 mm
Qty.	60 pc(s).	
Type	ZQV 1.5N/8 RD	Version
Order No.	1985770000	Cross-connector (terminal), Plugged, red, 17.5 A, Number of poles: 8,
GTIN (EAN)	4050118370508	Pitch in mm (P): 3.50, Insulated: Yes, Width: 26.5 mm
Qty.	20 pc(s).	
Type	ZQV 1.5N/7 RD	Version
Order No.	1985750000	Cross-connector (terminal), Plugged, red, 17.5 A, Number of poles: 7,
GTIN (EAN)	4050118370249	Pitch in mm (P): 3.50, Insulated: Yes, Width: 23 mm
Qty.	20 pc(s).	
Type	ZQV 1.5N/10	Version
Order No.	1985580000	Cross-connector (terminal), Plugged, orange, 17.5 A, Number of poles:
GTIN (EAN)	4050118370416	10, Pitch in mm (P): 3.50, Insulated: Yes, Width: 33.5 mm
Qty.	20 pc(s).	
Type	ZQV 1.5N/20 BL	Version
Order No.	1985700000	Cross-connector (terminal), Plugged, blue, 17.5 A, Number of poles:
GTIN (EAN)	4050118370331	20, Pitch in mm (P): 3.50, Insulated: Yes, Width: 70 mm
Qty.	20 pc(s).	
Type	ZQV 1.5N/10 RD	Version
Order No.	1985800000	Cross-connector (terminal), Plugged, red, 17.5 A, Number of poles: 10,
GTIN (EAN)	4050118370393	Pitch in mm (P): 3.50, Insulated: Yes, Width: 33.5 mm
Qty.	20 pc(s).	
Type	ZQV 1.5N/9	Version
Order No.	1985560000	Cross-connector (terminal), Plugged, orange, 17.5 A, Number of poles:
GTIN (EAN)	4050118370409	9, Pitch in mm (P): 3.50, Insulated: Yes, Width: 30 mm
Qty.	20 pc(s).	
Type	ZQV 1.5N/6 RD	Version
Order No.	1985730000	Cross-connector (terminal), Plugged, red, 17.5 A, Number of poles: 6,
GTIN (EAN)	4050118370454	Pitch in mm (P): 3.50, Insulated: Yes, Width: 19.5 mm
Qty.	20 pc(s).	
Type	ZQV 1.5N/2 BL	Version
Order No.	1985530000	Cross-connector (terminal), Plugged, blue, 17.5 A, Number of poles: 2,
GTIN (EAN)	4050118370423	Pitch in mm (P): 3.50, Insulated: Yes, Width: 5.5 mm
Qty.	60 pc(s).	

A4C 1.5 DL

Weidmüller Interface GmbH & Co. KG
Klingenbergstraße 26
D-32758 Detmold
Germany

www.weidmueller.com

Accessories

Type	ZQV 1.5N/5 RD	Version
Order No.	1985710000	Cross-connector (terminal), Plugged, red, 17.5 A, Number of poles: 5,
GTIN (EAN)	4050118370256	Pitch in mm (P): 3.50, Insulated: Yes, Width: 16 mm
Qty.	20 pc(s).	
Type	ZQV 1.5N/20	Version
Order No.	1985600000	Cross-connector (terminal), Plugged, orange, 17.5 A, Number of poles:
GTIN (EAN)	4050118370225	20, Pitch in mm (P): 3.50, Insulated: Yes, Width: 70 mm
Qty.	20 pc(s).	
Type	ZQV 1.5N/2 RD	Version
Order No.	1985650000	Cross-connector (terminal), Plugged, red, 17.5 A, Number of poles: 2,
GTIN (EAN)	4050118370324	Pitch in mm (P): 3.50, Insulated: Yes, Width: 5.5 mm
Qty.	60 pc(s).	
Type	ZQV 1.5N/3 BL	Version
Order No.	1985550000	Cross-connector (terminal), Plugged, blue, 17.5 A, Number of poles: 3,
GTIN (EAN)	4050118370485	Pitch in mm (P): 3.50, Insulated: Yes, Width: 9 mm
Qty.	60 pc(s).	
Type	ZQV 1.5N/6 BL	Version
Order No.	1985610000	Cross-connector (terminal), Plugged, blue, 17.5 A, Number of poles: 6,
GTIN (EAN)	4050118370492	Pitch in mm (P): 3.50, Insulated: Yes, Width: 19.5 mm
Qty.	20 pc(s).	
Type	ZQV 1.5N/50	Version
Order No.	1985620000	Cross-connector (terminal), Plugged, orange, 17.5 A, Number of poles:
GTIN (EAN)	4050118370300	50, Pitch in mm (P): 3.50, Insulated: Yes, Width: 175 mm
Qty.	5 pc(s).	

Custom printing

WS markers are the perfect match for the W-series connectors. Thanks to their system compatibility, the WS tags can also be used with the I-series and the Z-series. The large marking surfaces do not only permit long character strings but also multi-line text.
WS markers are ideal for labels with long, customised character strings. Thanks to the proven MultiCard format, printing with PrintJet CONNECT oder/or Plotter is possible.
• Can be fitted in strips or individually
• Markers in proven MultiCard format

For custom printing: Please send us a file of our labeling software M-Print PRO or M-Print PRO Online (without installation) for your labeling specifications.

General ordering data

Type	WS 10/3.5 PLUS MC SDR	Version
Order No.	2007760000	WS, Terminal marker, 10 x 3.5 mm, Pitch in mm (P): 3.50
GTIN (EAN)	4050118393262	Weidmueller, To customer specification
Qty.	192 pc(s).	

A4C 1.5 DL

Weidmüller Interface GmbH & Co. KG
Klingenbergstraße 26
D-32758 Detmold
Germany

www.weidmueller.com

Accessories

A-Series

Weidmüller's range of products includes end brackets that guarantee a permanent, reliable mounting on the terminal rail and prevent sliding. Versions with and without screws are available. The end brackets include marking options, also for group markers, and also a test plug holder.

General ordering data

Type	AEB 35 SC/1	Version
Order No.	1991920000	A-series, End bracket
GTIN (EAN)	4050118376722	
Qty.	50 pc(s).	
Type	AEB 35 SCL/1 V0 GY	Version
Order No.	2661290000	A-series, End bracket
GTIN (EAN)	4050118702170	
Qty.	20 pc(s).	
Type	AEB 35 SCL/1 V0	Version
Order No.	2661280000	A-series, End bracket
GTIN (EAN)	4050118702163	
Qty.	20 pc(s).	
Type	AEB 35 SC/1 BK	Version
Order No.	2475310000	A-series, End bracket
GTIN (EAN)	4050118487114	
Qty.	50 pc(s).	
Type	AEB 35 SCL/1 V0 BK	Version
Order No.	2661300000	A-series, End bracket
GTIN (EAN)	4050118702187	
Qty.	20 pc(s).	