SV-SMT 7.62IT/05/90MSF2 2.6SN BK BX

Weidmüller Interface GmbH & Co. KG
Klingenbergstraße 26
D-32758 Detmold
Germany

www.weidmueller.com

Product image

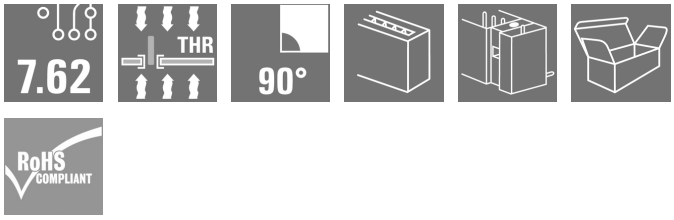

OMNIMATE Power for IT networks – scalable to 50 kVA

Tailor-made solutions for special requirements

More standard-compliance means fewer compromises: OMNIMATE Power for IT networks has integrated features incorporated as standard across the range. This makes the design-in and approvals process simpler and makes them safer and more reliable in operation.
Results for the application and advantages for the user: unlimited use in 400-V IT systems and touch safety according to IEC 61800-5-1 (+ 5.5 mm). The self-snapping one-handed safety flange enables intuitive and safe usage. Operational reliability is guaranteed by the automatic interlock feature during the plug-in process.
In conclusion: You need no additional device covering. The application-oriented design means that no compromises are necessary during the approval process.

General ordering data

Version	PCB plug-in connector, male header, Middle screw flange, THT/THR solder connection, 7.62 mm, Number of poles: 5, 90°, Solder pin length (l): 2.6 mm, tinned, black, Box
Order No.	2499860000
Type	SV-SMT 7.62IT/05/90MSF2 2.6SN BK BX
GTIN (EAN)	4050118513288
Qty.	36 pc(s).
Product data	IEC: 1000 V / 41 A UL: 300 V / 40.5 A
Packaging	Box

SV-SMT 7.62IT/05/90MSF2 2.6SN BK BX

Weidmüller Interface GmbH & Co. KG
Klingenbergstraße 26
D-32758 Detmold
Germany

www.weidmueller.com

Technical data

Dimensions and weights

Depth	28.3 mm	Depth (inches)	1.114 inch
Height	14 mm	Height (inches)	0.551 inch
Height of lowest version	11.4 mm	Width	45.72 mm
Width (inches)	1.8 inch	Net weight	10 g

System specifications

Product family	OMNIMATE Power - series BV/SV 7.62HP	Type of connection	Board connection
Mounting onto the PCB	THT/THR solder connection	Pitch in mm (P)	7.62 mm
Pitch in inches (P)	0.3 "	Outgoing elbow	90°
Number of poles	5	Number of solder pins per pole	2
Solder pin length (l)	2.6 mm	Solder pin length tolerance	+0.1 / -0.3 mm
Solder pin dimensions	0.8 x 1.0 mm	Solder eyelet hole diameter (D)	1.4 mm
Solder eyelet hole diameter tolerance (D)	+ 0,1 mm	L1 in mm	38.1 mm
L1 in inches	1.8 "	Number of rows	1
Pin series quantity	1	Touch-safe protection acc. to DIN VDE 57 106	safe to back of hand above the printed circuit board
Touch-safe protection acc. to DIN VDE 0470	IP 20	Protection degree	IP20, when fully mounted
Volume resistance	2.00 mΩ	Tightening torque for screw flange, min.	0.2 Nm
Tightening torque for screw flange, max.	0.3 Nm	Plugging cycles	25
Plugging force/pole, max.	12 N	Pulling force/pole, max.	7 N

Material data

Insulating material	PA 9T	Colour	black
Colour chart (similar)	RAL 9011	Insulating material group	I
Comparative Tracking Index (CTI)	≥ 600	Insulation strength	≥ 10^8 Ω
Moisture Level (MSL)	1	UL 94 flammability rating	V-0
Contact material	Cu-alloy	Contact surface	tinned
Layer structure of solder connection	1...3 µm Ni / 4...6 µm Sn matt	Layer structure of plug contact	1...3 µm Ni / 4...6 µm Sn matt
Storage temperature, min.	-40 °C	Storage temperature, max.	70 °C
Operating temperature, min.	-50 °C	Operating temperature, max.	130 °C
Temperature range, installation, min.	-25 °C	Temperature range, installation, max.	130 °C

Rated data acc. to IEC

tested acc. to standard	IEC 60664-1, IEC 61984	Rated current, min. number of poles (Tu=20°C)	41 A
Rated current, max. number of poles (Tu=20°C)	41 A	Rated current, min. number of poles (Tu=40°C)	41 A
Rated current, max. number of poles (Tu=40°C)	41 A	Rated voltage for surge voltage class / pollution degree II/2	1,000 V
Rated voltage for surge voltage class / pollution degree III/2	630 V	Rated voltage for surge voltage class / pollution degree III/3	630 V
Rated impulse voltage for surge voltage class/ pollution degree II/2	6 kV	Rated impulse voltage for surge voltage class/ pollution degree III/2	6 kV
Rated impulse voltage for surge voltage class/ contamination degree III/3	6 kV	Short-time withstand current resistance	3 x 1s with 420 A
Clearance, min.	6.9 mm	Creepage distance, min.	9.6 mm

SV-SMT 7.62IT/05/90MSF2 2.6SN BK BX

Weidmüller Interface GmbH & Co. KG
Klingenbergstraße 26
D-32758 Detmold
Germany

www.weidmueller.com

Technical data

Rated data acc. to UL 1059

Institute (cURus)		Certificate No. (cURus)	E60693
Rated voltage (Use group B / UL 1059)	300 V	Rated voltage (Use group C / UL 1059)	300 V
Rated voltage (Use group D / UL 1059)	300 V	Rated current (Use group B / UL 1059)	40.5 A
Rated current (Use group C / UL 1059)	40.5 A	Rated current (Use group D / UL 1059)	10 A
Clearance distance, min.	6.9 mm	Creepage distance, min.	9.6 mm
Reference to approval values	Specifications are maximum values, details - see approval certificate.		

Packing

Packaging	Box	VPE length	350 mm
VPE width	135 mm	VPE height	40 mm

Classifications

ETIM 6.0	EC002637	ETIM 7.0	EC002637
ETIM 8.0	EC002637	ETIM 9.0	EC002637
ECLASS 9.0	27-44-04-02	ECLASS 9.1	27-44-04-02
ECLASS 10.0	27-44-04-02	ECLASS 11.0	27-46-02-01
ECLASS 12.0	27-46-02-01	ECLASS 13.0	27-46-02-01
ECLASS 14.0	27-46-02-01		

Environmental Product Compliance

REACH SVHC	/
RoHS Compliance Status	Compliant without exemption

Important note

IPC conformity	Conformity: The products are developed, manufactured and delivered according international recognized standards and norms and comply with the assured properties in the data sheet resp. fulfill decorative properties in accordance with IPC-A-610 "Class 2". Further claims on the products can be evaluated on request.
Notes	• Additional variants on request • Rated current related to rated cross-section & min. No. of poles. • P on drawing = pitch • Rated data refer only to the component itself. Clearance and creepage distances to other components are to be designed in accordance with the relevant application standards. • In accordance with IEC 61984, OMNIMATE-connectors are connectors without breaking capacity (COC). During designated use, connectors are not allowed to be engaged or disengaged when live or under load • Long term storage of the product with average temperature of 50 °C and maximum humidity 70%, 36 months

SV-SMT 7.62IT/05/90MSF2 2.6SN BK BX

Weidmüller Interface GmbH & Co. KG
Klingenbergstraße 26
D-32758 Detmold
Germany

www.weidmueller.com

Technical data

Approvals

Approvals	
ROHS	Conform
UL File Number Search	UL Website
Certificate No. (cURus)	E60693

Downloads

Engineering Data	CAD data – STEP
Product Change Notification	20220105 Material change SV-SMT 7.62 20220105 Materialänderung SV-SMT
Catalogues	Catalogues in PDF-format

SV-SMT 7.62IT/05/90MSF2 2.6SN BK BX

Weidmüller Interface GmbH & Co. KG
Klingenbergstraße 26
D-32758 Detmold
Germany

www.weidmueller.com

Drawings

Product image

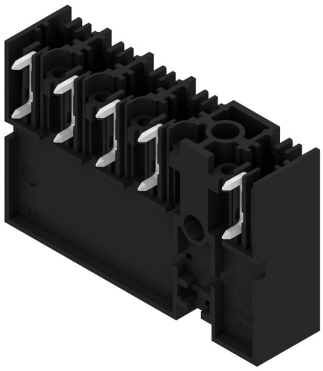

Dimensional drawing

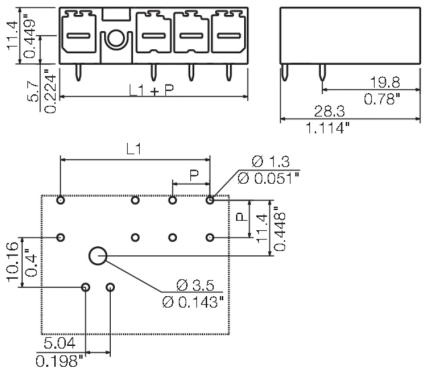

SV-SMT 7.62IT/05/90MSF2 2.6SN BK BX

Weidmüller Interface GmbH & Co. KG
Klingenbergstraße 26
D-32758 Detmold
Germany

www.weidmueller.com

Accessories

Coding elements

The pluggable connections for power electronics - optimised for modern drive technologies, e.g. motor starters, frequency converters and servo-controllers.
OMNIMATE Power sets the new standard – with increased safety and innovative solutions such as the pluggable shield, integrated signal contacts and one-handed operation.
The three product lines offer you further advantages:
- Application-oriented scalability: from the compact 4 mm² connector for 29 A (IEC) or 20 A (UL) up to the sturdy 16 mm² connector for 76 A (IEC) or 54 A (UL)
- Unlimited usage up to 1,000 V (IEC) or 600 V (UL)
- A variety of application optimised mounting options

Our Service:
Design your individual connectors simply by using the

General ordering data

Type	BV/SV 7.62HP KO	Version	Product data	Packaging
Order No.	1937590000	PCB plug-in connector, Accessories, Coding element, black, Number of poles: 1		Box
GTIN (EAN)	4032248608881			
Qty.	50 pc(s).			

SV-SMT 7.62IT/04/270MF3

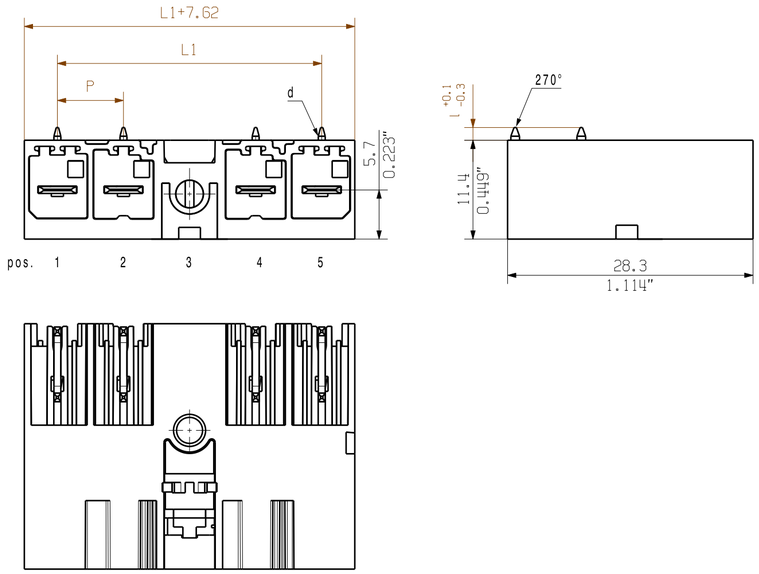

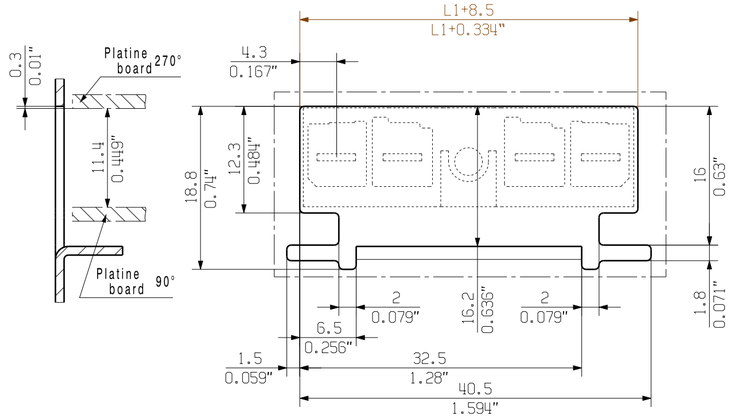

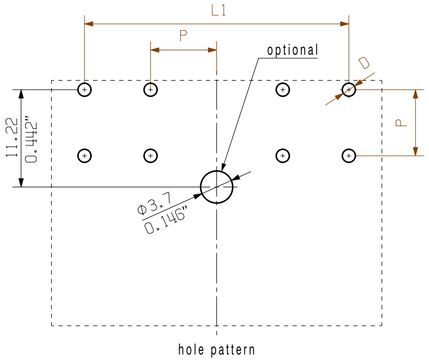

hole pattern

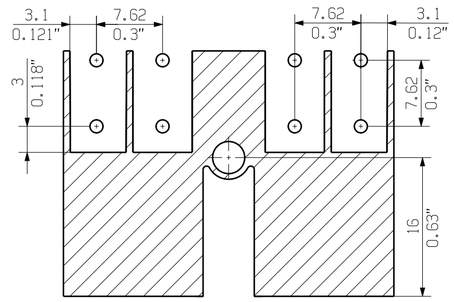

paste free area
max. dimension

SV-SMT 7.62IT/04/270MSF3

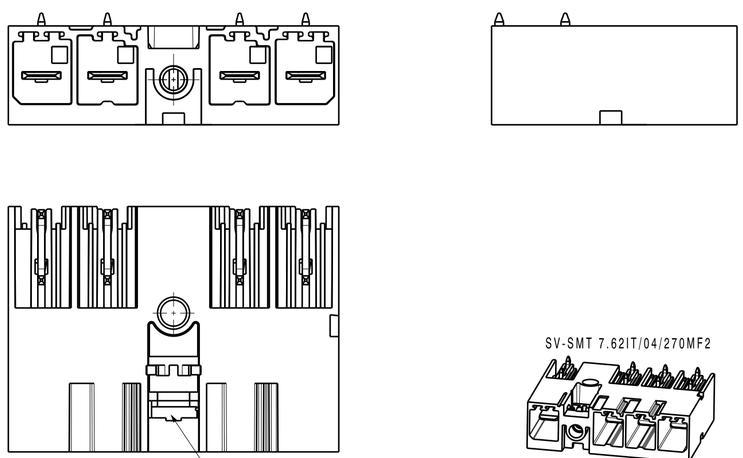

SV-SMT 7.62IT/04/270MF2

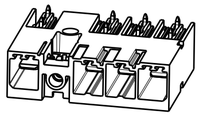

SV-SMT 7.62IT/04/270MSF2

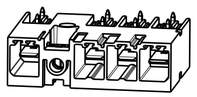

SV-SMT 7.62IT/04/270MF3

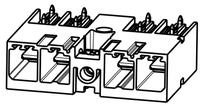

SV-SMT 7.62IT/04/270MSF3

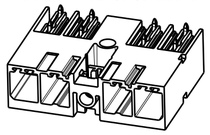

SV-SMT 7.62IT/04/270MF4

SV-SMT 7.62IT/04/270MSF4

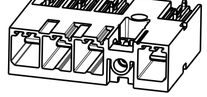

SO = ohne voreilenden Kontakt/
without leading pin

D = Ø1.4+0.1/-0.05
d = 0.8x1.0

POL = Pol/pole
PE = Voreilender Kontakt / leading pin
P = Raster / pitch 7.62
MF = Mittelflansch
middle flange
MSF = Mittelschraubflansch
middle flange with screw

For the mounting of PCBs, it should be noted that the rated data relates only to the PCB components alone.
The neccessary creepage and clearance paths must be observed in connection with the respective applicant in accordance to IEC 664 / VDE 0110.
The current-carrying capacity and pitch tolerance is to be determined according to DIN IEC 326 part 3 very fine.

Weidmüller PCB components are tested to the DIN EN 61984 standard, and are valid for its field of application. Provided that the components are used to the intended purpose, all requirements with respect to the occuring of electrical, mechanical, thermic and corrosive stress will be satisfied.

1.5
2.6
3.5
l [mm]

GENERAL TOLERANCE:
DIN ISO 2768-m

description	no of poles	L1 [mm]	L1 [inch]	1	2	3	4	5	6	7	8	9
				position MF								
SV 7.62IT/05/...M(S)F5	5	38.10	1.50	Pol	Pol	Pol	Pol	MF	PE			
SV 7.62IT/05/...M(S)F4				Pol	Pol	Pol	MF	Pol	Pol			
SV 7.62IT/05/...M(S)F3				Pol	Pol	MF	Pol	Pol	Pol			
SV 7.62IT/05/...M(S)F2				PE	MF	Pol	Pol	Pol	Pol			
SV 7.62IT/04/...M(S)F4	4	30.48	1.20	Pol	Pol	Pol	MF	PE				
SV 7.62IT/04/...M(S)F3				Pol	Pol	MF	Pol	Pol				
SV 7.62IT/04/...M(S)F2				PE	MF	Pol	Pol	Pol				
SV 7.62IT/03/...M(S)F3	3	22.86	0.90	Pol	Pol	MF	PE					
SV 7.62IT/03/...M(S)F2				PE	MF	Pol	Pol					
SV 7.62IT/02/...M(S)F2 SO	2	15.24	0.60	Pol	MF	Pol						

RoHS COMPLIANT

EC00002212

First Issue Date
14.11.2016

Max. nos.

Modification

Prim PLM Part No.: 225880

Prim ERP Part No.: 2499550000

Weidmüller

63450
Drawing no.

4
Issue no.

Sheet 16 of 17 sheets

	Date	Name
Drawn	30.08.2019	Helis, Maria
Responsible		Döhrer, Karl
Approved	09.10.2019	Lang, Thomas

Scale: 2:1 Size: A2

Drawings Assembly

SV-SMT 7.62HP/IT/../90/270...
STISTLEISTE
MALE HEADER

Product file: 7407 BLF 7.50HP

The reproduction, distribution and utilization of this document as well as the communication of its contents to others without explicit authorization is prohibited.
Offenders will be held liable for the payment of damages. Weidmueller exclusively reserves the right to file for patents, utility models or designs.
© Weidmueller Interface GmbH & Co. KG

Recommended wave solderding profiles

Weidmüller Interface GmbH & Co. KG
Klingenbergstraße 16
D-32758 Detmold
Germany
Fon: +49 5231 14-0
Fax: +49 5231 14-292083
www.weidmueller.com

Single Wave:

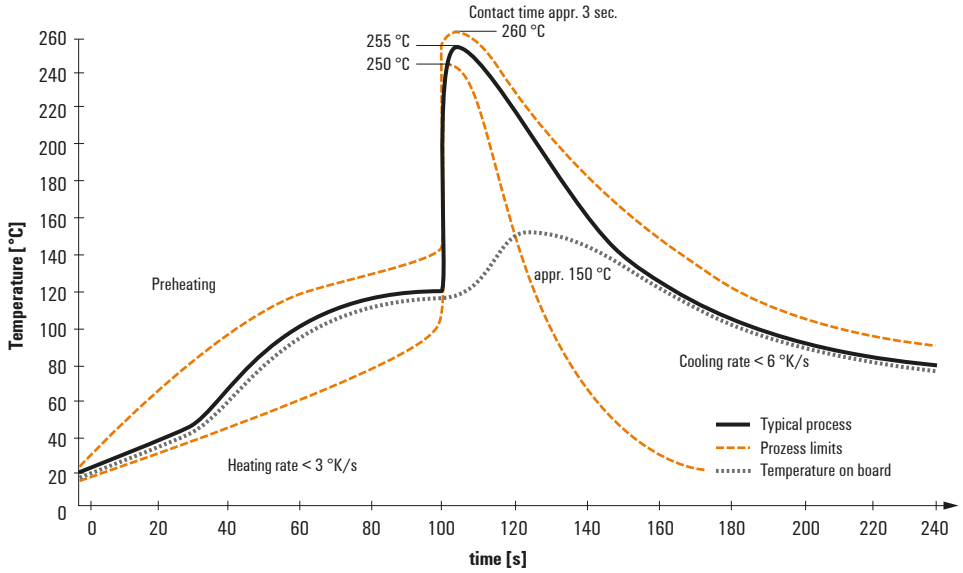

Double Wave:

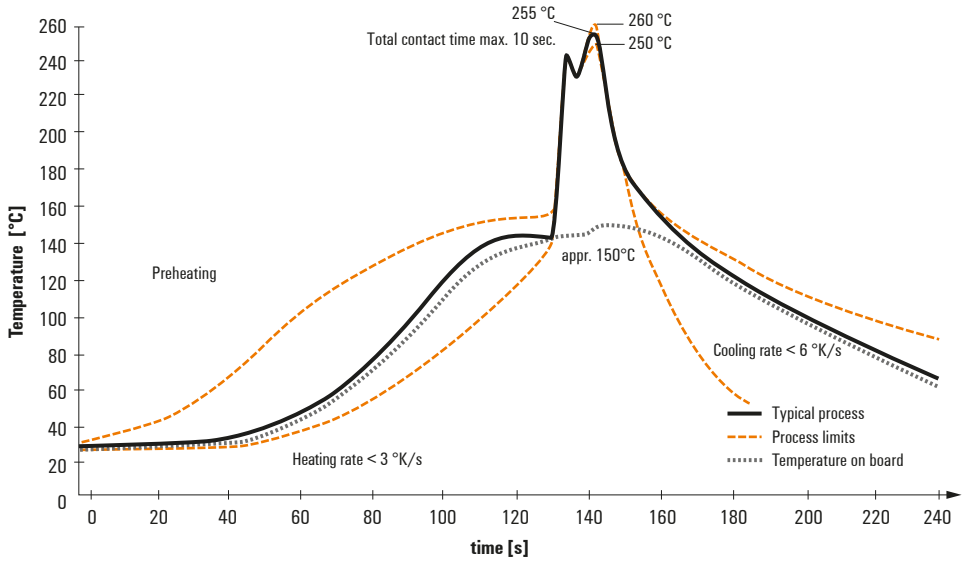

Wave soldering profiles

Wired connection elements should be processed in accordance with the DIN EN 61760-1 standard. We have included two recommendations for practical wave soldering profiles, with which Weidmüller PCB terminals and connectors are qualified.

When choosing a suitable profile for your application, the following factors also need to be considered:
- PCB thickness
- Proportion of Cu in the layers
- Single/double-sided assembly
- Product range
- Heating and cooling rates

The single and double wave profiles each indicate the recommended operating range, including the maximum soldering temperature of 260°C. In practice, the maximum soldering temperature is quite often well below the above maximum profile.

We reserve the right to make technical changes.

Recommended reflow soldering profile

Weidmüller Interface GmbH & Co. KG
Klingenbergstraße 16
D-32758 Detmold
Germany
Fon: +49 5231 14-0
Fax: +49 5231 14-292083
www.weidmueller.com

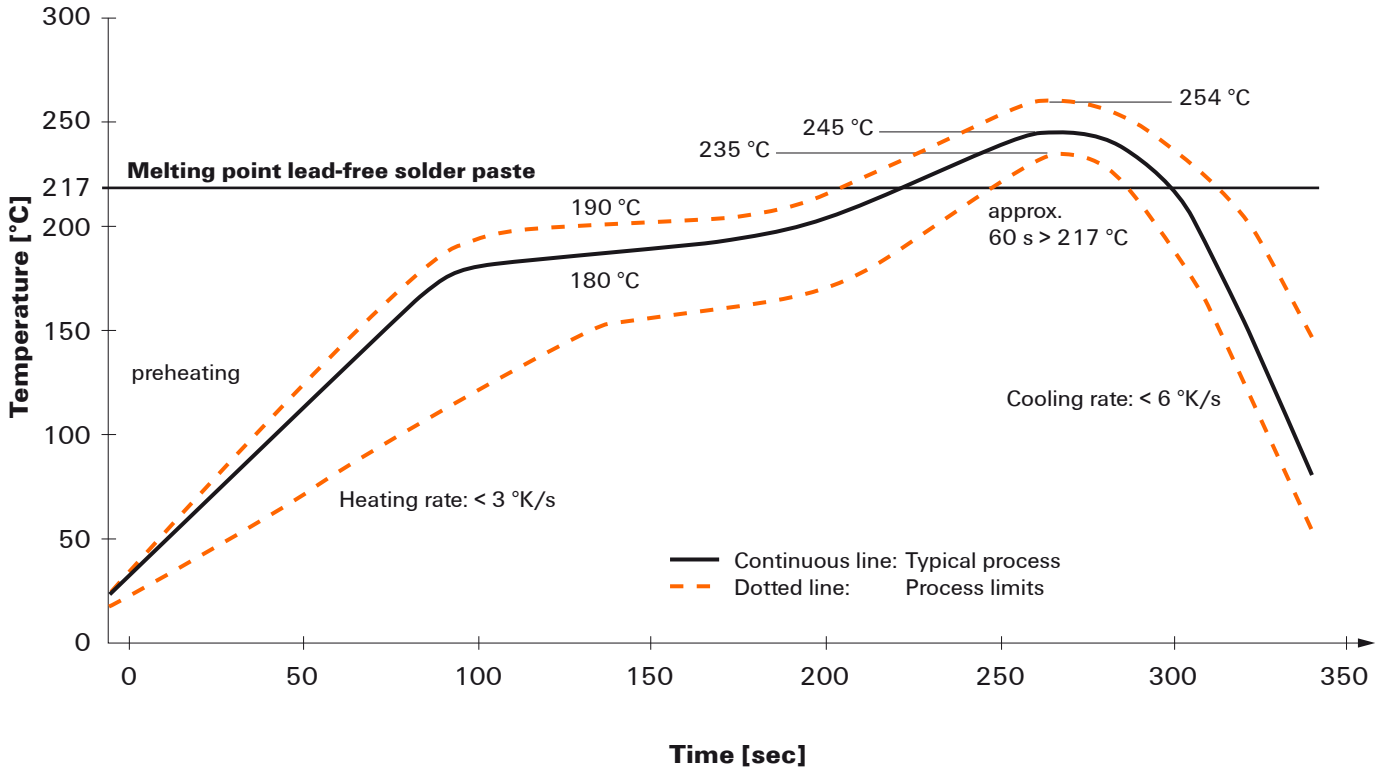

Reflow soldering profile

The perfect soldering profile for SMT Surface Mount Technology is one the most exiting question in SMT production. But there are more than one correct answer: The diagram of temperature-on-time is related to processing features of solder paste and to maximum load of components.

We have to consider the following parameters:
- Time for pre heating
- Maximum temperature
- Time above melting point
- Time for cooling
- Maximum heating rate
- Maximum cooling rate

We recommend a typical solder profile with associated process limits. With preheating components and board are prepared smoothly for the solder phase. Heating rate is typically ≤ +3K/s. In parallel the solder paste is ‚activated'. The time above melting point of 217°C the paste gets liquid and components and boards begin to connect. The maximum temperature of 245°C to 254°C should stay between 10 and 40 seconds. In the cooling phase at ≥ -6K/s solder is cured. Board and components cool down while avoiding cold cracks.

We reserve the right to make technical changes.